INSTALLATION, OPERATION & MAINTENANCE MANUAL

R & RX SERIES
TOP DISCHARGE
Electric Submersible Pumps

Single Phase
115V & 230V
Three Phase
230V & 460V

CAST IRON

SINGLE PHASE	THREE PHASE
R100	R08
R250	R15
R400	
R400D	
R400P	
R750	
R1500	
R1520	
R1530	

316 STAINLESS STEEL

SINGLE PHASE	THREE PHASE
RX750SS	RX08SS
RX1500SS	RX15SS

Read this manual carefully before installing, operating or servicing these pump models. Observe all safety information. Failure to comply with instructions may result in personal injury and/or property damage. Please retain these instructions.

Version 12/16/2014

TABLE OF CONTENTS

INTRODUCTION....4

SAFETY....5

INSPECTION....6

- PRE-INSTALLATION INSPECTION....6
- OIL FILL QUANTITY/TYPE....6
- PUMP INSTALLATION....7
- POSITIONING THE PUMP....7
- PUMP ROTATION....8

PUMP OPERATION....9

TYPICAL MANUAL DEWATERING INSTALLATION....9

- STOPPING....10

TYPICAL AUTOMATIC DEWATERING INSTALLATION....10

- AUTOMATIC OPERATION....10
- STOPPING....11

INTENDED METHODS OF CONNECTION....11

- SINGLE PHASE WIRING INSTRUCTIONS....11
- THREE PHASE WIRING INSTRUCTIONS....12

TROUBLE SHOOTING....13

- PUMP WILL NOT RUN....14
- PUMP RUNS BUT DOES NOT DELIVER RATED CAPACITY....14

R400D ONLY NOTE: THIS UNIT MAY NEED TO BE PRIMED....14

- SERVICING YOUR SUBMERSIBLE PUMP....14
- MAINTAINING YOUR PUMP....14
- CHANGING SEAL OIL....15

EXPLODED VIEW OF R100....16

EXPLODED VIEW OF R250, R400 & R400D, R400P....17

EXPLODED VIEW OF R750, RX750SS, R1500, RX1500SS, R1520 & R1530....18

EXPLODED VIEW OF R08, RX08SS, R15, RX15SS....19

R SERIES PARTS LIST....20

RX SERIES PARTS LIST....22

SINGLE PHASE WIRING DIAGRAM 115V & 230V W/O GOVERNOR SWITCH....24

- MODELS R100, R250, R400 R400D, R400P....24

SINGLE PHASE WIRING DIAGRAM 115V & 230V W/GOVERNOR SWITCH....25

- MODELS R750, RX750SS, R1500, RX1500SS, R1520 & R1530....25

THREE PHASE WIRING DIAGRAM....26

- MODELS R08, RX08SS, R15, RX15SS (230V)....26

THREE PHASE WIRING DIAGRAM....27

- MODELS R08, RX08SS, R15, RX15SS(460V)....27

WARRANTY AND LIMITATION OF LIABILITY....28

START-UP REPORT FORM....29

NOTES:....32

INTRODUCTION

This Installation, Operation and Maintenance manual provides important information on safety and the proper inspection, disassembly, assembly and testing of the BJM Pumps® R & RX Series submersible pump. This manual also contains information to optimize performance and longevity of your **BJM Pumps** submersible pump.

The submersible R Series pumps are designed to pump water. The RX Series pumps are designed to pump corrosive liquids in concentrations chemically compatible with 316SS and FKM. The R & RX Series pumps are not explosion-proof. They are not designed to pump volatile or flammable liquids.

Note: Consult chemical resistance chart for compatibility between pump materials and liquid before operating pump.

If you have any questions regarding the inspection, disassembly, assembly or testing please contact your **BJM Pumps** distributor, or BJM Pumps, LLC.

BJM Pumps, LLC
123 Spencer Plain Rd.
Old Saybrook, CT 06475, USA

Fax: 860-399-7784
Phone: 877-256-7867
Phone: 860-399-5937

Information, including pump data sheets and performance curves, is also available on our web site: www.bjmpumps.com

For assistance with your electric power source, please contact a certified electrician.

Please pay attention to the following alert notifications. They are used to notify operators and maintenance personnel to pay special attention to procedures, to avoid causing damage to the equipment, and to avoid situations that could be dangerous to personnel.

NOTE: Instructions to aid in installation, operation, and maintenance or which clarify a procedure.

⚠ DANGER Immediate hazards that WILL result in severe personal injury or death. These instructions describe the procedure required and the injury which will result from failure to follow the procedure.

⚠ WARNING Hazards or unsafe practices that COULD result in severe personal injury or death. These instructions describe the procedure required, and the injury which could result from failure to follow the procedure.

⚠ CAUTION Hazards or unsafe practices which COULD result in personal injury or product or property damage. These instructions describe the procedure required and the possible damage which could result from failure to follow the procedure.

SAFETY

Pump installations are seldom identical. Each installation and application can vary due to many different factors. It is the owner/service mechanics responsibility to repair, service, and test to ensure that the pump integrity is not compromised according to this manual.

⚠ WARNING Risk of electric shock – this pump has not been investigated for use in swimming pool areas.

⚠ DANGER **Do not pump flammable, inflammable or volatile liquids. <u>Death or serious injury will result.</u>**

⚠ WARNING Before attempting to open or service the pump:

1) Familiarize yourself with this manual.
2) Unplug or disconnect the pump power cable to ensure that the pump will remain inoperative.
3) Allow the pump to cool if overheated.

⚠ WARNING Do not operate the pump with a worn or damaged electric power cable. Death or serious injury could occur.

⚠ WARNING Never attempt to alter the length or repair any power cable with a splice. The pump motor and pump motor and cable must be completely waterproof. Damage to the pump or personal injury may result from alterations.

⚠ WARNING After the pump has been installed, make sure that the pump and all piping are secure before operation.

⚠ WARNING Do not lift the pump by the power cable piping or discharge hose. Attach proper lifting equipment to the lifting handle (or lifting rings) fitted to the pump. Do not suspend the pump by the power cable.

⚠ WARNING Obtain the services of a qualified electrician to troubleshoot, test and/or service the electrical components of this pump.

⚠ CAUTION Pumps and related equipment must be installed and operated according to all national, local and industry standards.

INSPECTION

Review all safety information before servicing pump.

The following are recommended installation practices/procedures for the pump. If there are questions in regards to your specific application, contact your local **BJM Pumps** distributor or BJM Pumps, LLC.

PRE-INSTALLATION INSPECTION

1) Check the pump for damage that may have occurred during shipment.
2) Inspect the pump for any cracks, dents, damaged threads, etc.
3) Check power cord for any cuts or damage.
4) Check for, and tighten any hardware that appears loose.
5) Carefully read all tags, decals and markings on the pump.

If anything appears to be abnormal, contact your **BJM Pumps** distributor or BJM Pumps, LLC. If damaged, the pump may need to be repaired before use. Do not install or use the pump until appropriate action has been taken.

Lubrication:

No additional lubrication is necessary. The shaft seal and bearings are fully lubricated from the factory. Seal oil should be checked once per year. See table below.

OIL FILL QUANTITY/TYPE

Pump Models	Qty. oil in seal chamber		Type of oil
	(U.S. fl. oz.)	Metric C.C.	
R100	9.5	280	ISO 32 NSF Food Grade Oil
R250, R400, R400D, R400P	1.35	40	ISO 32 NSF Food Grade Oil
R750, R1500, R1530, R1520	3.7	110	ISO 32 NSF Food Grade Oil
RX750SS, RX1500SS	4.4	130	ISO 32 NSF Food Grade Oil
R400L, R400L-3	4.4	130	ISO 32 NSF Food Grade Oil
R08, R15	3.7	110	ISO 32 NSF Food Grade Oil
RX08SS, RX15SS	4.4	130	ISO 32 NSF Food Grade Oil

PUMP INSTALLATION

R & RX Series pumps have been evaluated for use with water or water based solutions. Please contact the manufacturer for additional information.

⚠ WARNING **Risk of electric shock.** Pump models; R100, R250, R400, R400D, R400P, R750 & RX750 (115v) are supplied with a grounding conductor and grounding-type attachment plug. Pump models; R1500, R15, R08, RX08SS & RX15SS do not come with electric plug connectors. To reduce the risk of electric shock, be certain that it is connected only to a properly grounded, grounding-type receptacle.

Lifting:

Attach a rope or lifting chain (not included) to the handle (or lifting rings) on the top of the pump.

⚠ CAUTION Do not lift the pump by the power cable or discharge hose/piping. Proper lifting equipment (rope/chain) must be used.

POSITIONING THE PUMP

BJM Pumps, R & RX Series pumps are designed to operate fully or partially submerged. Avoid running the pump dry for extended periods of time. Refer to data sheet for minimum submersion depth for your particular model. Data sheets can be obtained online at www.bjmpumps.com or by calling BJM Pumps, LLC at 860-399-5937. As a general rule, R and RX Series top discharge pumps can pump down to a level above the suction screen. Pumping lower than screen will permit air to enter the pump and cavitate, lose prime or become air bound.

⚠ CAUTION

- Do not run pump dry.
- Pump liquid should not exceed a maximum temperature of 104°F.
- Never place the pump on loose or soft ground. The pump may sink, preventing water from reaching the impeller. Place on a solid surface or suspend the pump with a lifting rope/chain. The R & RX Series pumps are provided with a suction strainer to prevent large solids from clogging the impeller. Any spherical solids which pass through the strainer should pass through the pump.
- For maximum pumping capacity, use the proper size non-collapsible hose or rigid piping. A check valve may be installed after the discharge to prevent back flow when the pump is shut off.

PUMP ROTATION

Two ways to check the correct pump rotation:

1. By looking at the impeller; the rotation of the impeller should be counter clockwise as shown in the picture below.

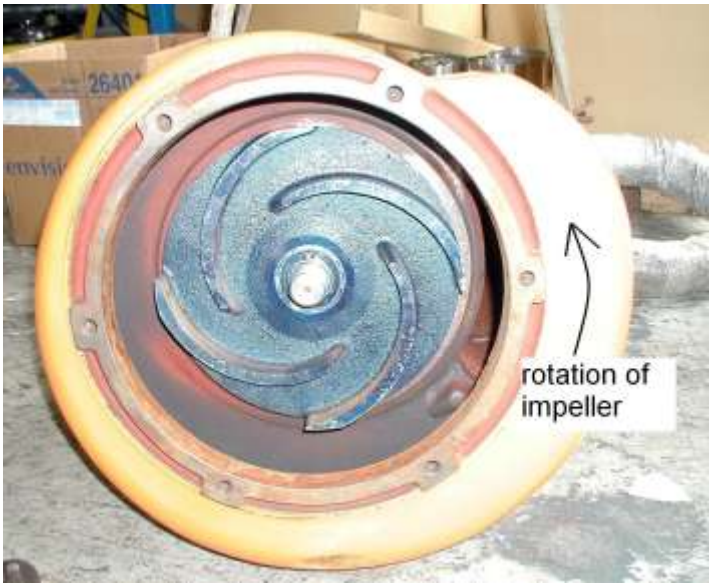

2. By looking from the top of the pump. Since the impeller cannot be seen, the best way to check the rotation is to check the kick back motion of the pump when the pump just starts. The kick back motion of the pump should be counter clockwise as shown in the picture below.

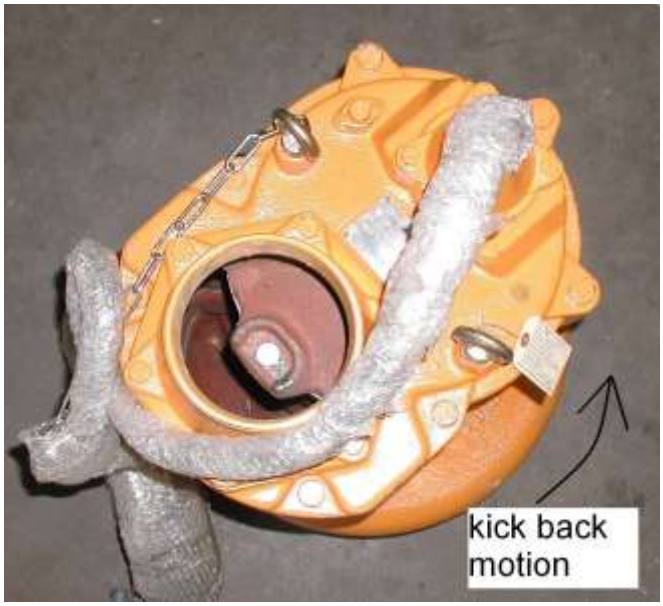

PUMP OPERATION

⚠ WARNING This pump is designed to handle dirty water that contains some solids. It is not designed to pump volatile or flammable liquids. Do not attempt to pump any liquids which may damage the pump or endanger personnel as a result of pump failure.

⚠ DANGER **Do not operate this pump where explosive vapors or flammable material exist. Death or Serious injury will result.**

TYPICAL MANUAL DEWATERING INSTALLATION

NOTE: Maximum recommended starts should not exceed 10 times per hour.

Models R100, R250, R400, and R400D are provided with a 33' (10 m) power cord and models R750, RX750SS R1500, RX1500SS, R1520, R1530, R08, RX08SS, R15, & RX15SS, are supplied with a 50' (15m) power cord. NEVER splice the power cable due to safety and warranty considerations. Always keep the plug end dry.
Note: 230V, single phase and 208V, 230V, 460V & 575V three phase units do not have a plug and have to be provided separately.

⚠ WARNING Do not alter the length or repair any power cable with a splice. The pump motor and cable must be completely waterproof. Damage to the pump or personal injury may result from alterations.

For manual operation: 115 volt: plug the power cable into any 115 volt grounded receptacle. 230 and 460 volt: Attach the proper plug, connect directly to the power source or control box. Check the direction of the rotation. Tilt the pump and start it. It should twist in the opposite direction of the arrow (on pump). It is recommended that a Ground Fault Interrupter (GFI) type receptacle (or equivalent) be used.

⚠ WARNING Single phase pumps always use a three-prong grounded receptacle. It is recommended that a Ground Fault Interrupter (GFI) type receptacle (or equivalent) be used.

TYPICAL MANUAL DEWATERING INSTALLATION (WITHOUT PIGGY-BACK FLOAT CONTROL)

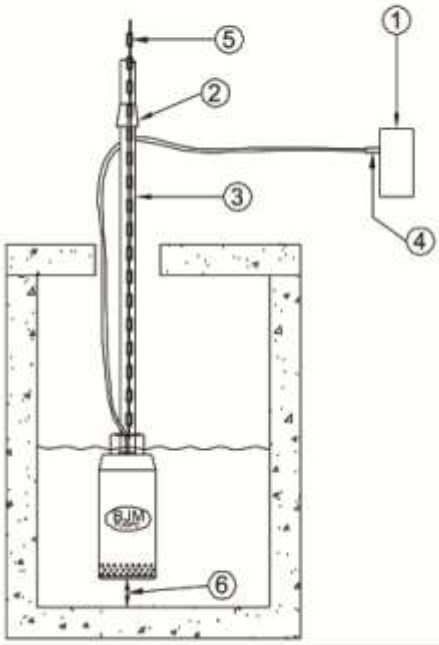

1) Electrical wiring and protection must be in accordance with National Electrical Code in U.S.A. or Canadian Electrical Code in Canada and state / provincial and local electrical codes.

2) Optional (approx. 50' / 15 meters) : If pumping in a small confined space at high head, it may be beneficial to install a check valve 3' (1 meter) above the discharge of the pump. This will help eliminate backflow and unnecessary running of the pump. For best results use a section of PVC.

3) PVC pipe or rigid hose recommended. Collapsible vinyl hose will work but not as efficiently.

4) All electrical connections must be kept dry.

5) Always lower the pump by a separate rope or chain. Never lift or lower the pump by the power cord, piggy-back cord or discharge hose.

6) For best results, place the pump on a solid object, or suspend pump 4" - 6" (100 mm - 150 mm) above the bottom. This will keep the pump from digging itself into silt, sand and mud.

REVISION 3/28/2006 Not for use in hazardous locations. SPECIFICATIONS SUBJECT TO CHANGE WITHOUT NOTICE

BJM Pumps, LLC. - 123 SPENCER PLAIN ROAD, OLD SAYBROOK, CT 06475 - PHONE: 860-399-5937 - FAX: 860-399-7784

STOPPING

To stop the pump (manual and automatic mode), unplug it from the power source, turn off the breaker, or turn the power source off (generator).

Typical 3 phase manual control 1

TYPICAL AUTOMATIC DEWATERING INSTALLATION

NOTE: Maximum recommended starts should not exceed 10 times per hour.

AUTOMATIC OPERATION

Float switches (wired into the pump motor or piggy-back style) are available from the factory as an option.

Note: 230V & 460V pumps do not have a plug installed.

Three phase pumps need a separate control box with float(s) for automatic operation.

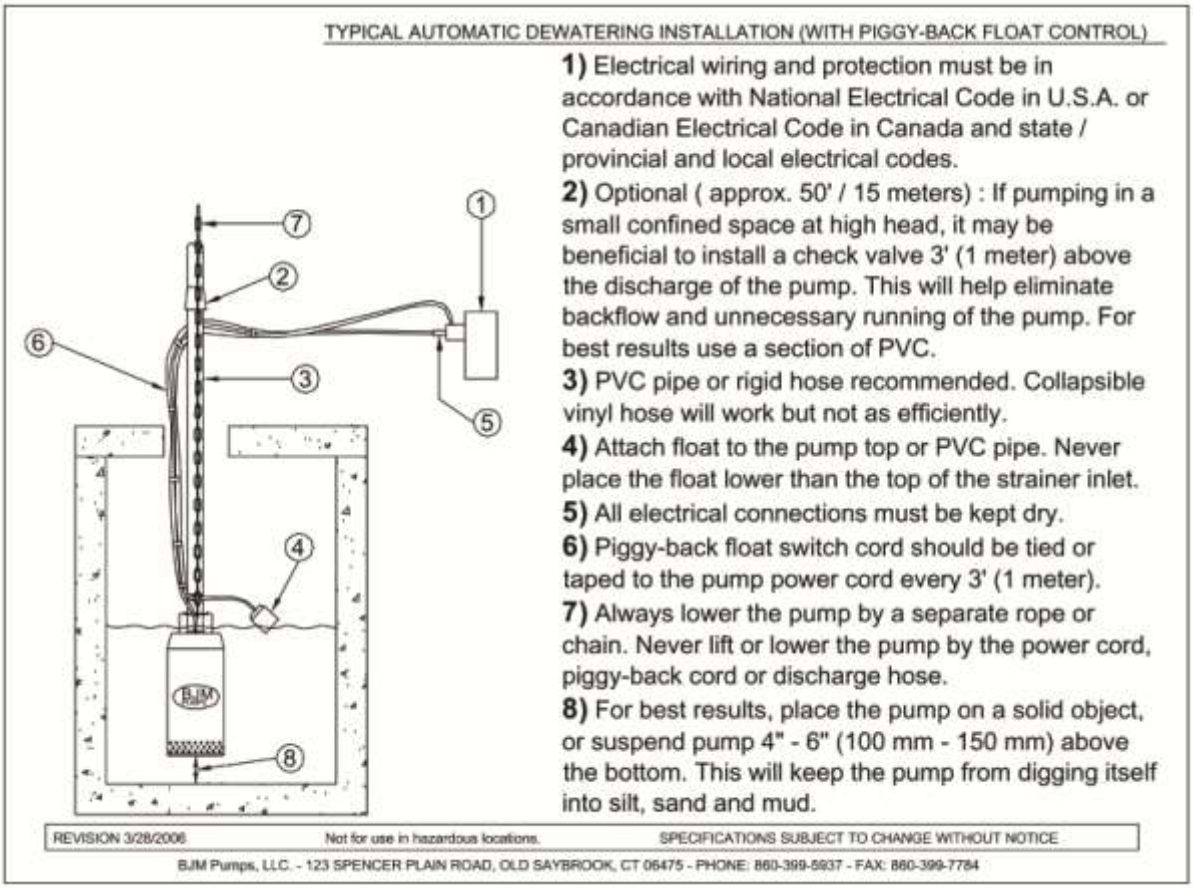

STOPPING

To stop the pump (manual and automatic mode), unplug it from the power source, turn off the breaker, or turn the power source off (generator).

INTENDED METHODS OF CONNECTION

⚠ CAUTION Use with approved motor control that matches motor input in full load amperes. “UTILLISER UN DÉMARREAR APPROUVÉ CONVENANT AU COURANT Á PLEINE CHARGE DU MOTEUR.”

BJM Pumps has been evaluated for use with water or water based solutions. Please contact the manufacturer for additional information.

SINGLE PHASE WIRING INSTRUCTIONS

⚠ WARNING **FOR YOUR PROTECTION, ALWAYS DISCONNECT PUMP FROM ITS POWER SOURCE BEFORE HANDLING.** Single phase pumps are supplied with a three prong grounded plug to help protect you against the possibility of electrical shock. **DO NOT UNDER ANY CIRCUMSTANCES REMOVE THE GROUND PIN.** The three prong plug **must** be inserted into a mating three prong grounded receptacle. **IF** the installation does not have such a receptacle it must be changed to the proper type, wired and grounded in accordance with the National Electrical Code and all applicable local codes and ordinances.

⚠ WARNING **"Risk of electrical shock"** Do not remove power supply cord and strain relief or connect conduit directly to the pump.

⚠ WARNING Installation and checking of electrical circuits and hardware should be performed by a qualified licensed electrician.

THREE PHASE WIRING INSTRUCTIONS

⚠ WARNING **FOR YOUR PROTECTION, ALWAYS DISCONNECT PUMP FROM ITS POWER SOURCE BEFORE HANDLING.**

⚠ WARNING **"Risk of electrical shock"** Do not remove power supply cord and strain relief or connect conduit directly to the pump.

⚠ WARNING Installation and checking of electrical circuits and hardware should be performed by a qualified licensed electrician.

To automatically operate a non-automatic three phase pump, a control panel is required. Follow the instructions provided with the panel to wire the system. For automatic three phase pumps see automatic three phase wiring diagram.

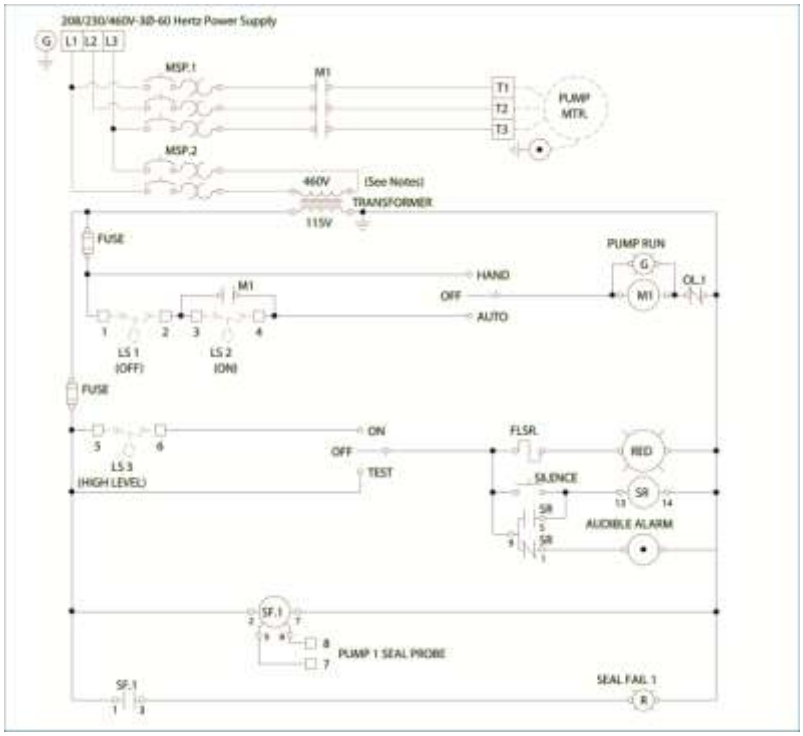

Typical 3 phase Auto Control 1

Before installing a pump, check the pump rotation to insure that wiring has been connected properly to power source, and that the green lead of power cord (See wiring diagram), is connected to a valid ground, momentarily energize the pump, observing the directions of kick back due to starting torque. Rotation is correct if kick back is in the opposite direction of rotation arrow on the pump casing. If rotation is not correct, switching of any two power leads other than ground will provide the proper rotation.

Three phase pumps have integral motor overload protection. It is recommended that all three phase pumps using a motor starting device also incorporate motor overload protection. Pumps **must** be installed in accordance with the National Electrical Code and all applicable local codes and ordinances. Pumps are not to be installed in locations classified as hazardous in accordance with National Electrical Code, ANSI/NFPA 70.

Connect pump to a junction box, outlet box, control box, enclosure with a wiring compartment that meets NEC and local codes. The provision for supply connection shall reduce the risk of water entry during temporary, limited submersion and shall comply with the applicable requirements of the Standard for Enclosures for Electrical Equipment, UL 50, or the standard for Metallic Outlet Boxes, UL 514A, and the standard for Motor-Operated Water Pumps. UL 778.

TROUBLE SHOOTING

⚠ WARNING

Disconnect the power source to the pump BEFORE attempting any type of trouble shooting, service or repair.

PUMP WILL NOT RUN

1. Check power supply (fuses, breaker). Reset power.
2. Blocked impeller. Remove strainer, check and clean.
3. Defective cable or incorrect wiring.
4. Strainer clogged. Check and clean as necessary.
5. Float switch tangled/obstructed. Clean and free float switch from obstruction.
6. Float switch defective. Replace float switch.
7. Pump overheated or temperature of liquid exceeds pump operating temperature.

Warning: Pump will restart automatically when motor over-heat protection switch cools.

PUMP RUNS BUT DOES NOT DELIVER RATED CAPACITY

1. Discharge line clogged, restricted or hose kinked. Check discharge hose/pipe.
2. Worn impeller and/or suction cover. Inspect and replace as necessary.
3. Pump overloaded due to liquid pumped being too thick.
4. Pumping air. Check liquid level and position of pump.
5. Excessive voltage drops due to long cables.
6. Three phase only; pump running backwards, check rotation.

R400D ONLY NOTE: THIS UNIT MAY NEED TO BE PRIMED.

To prime, submerge in a bucket filled with water. Water needs to be above the impeller inside the pump for a proper start. This is approximately 6” from the bottom of the pump. Pump can also be primed by pouring water into the discharge. You will need at least 2 quarts to prime.

SERVICING YOUR SUBMERSIBLE PUMP

Pump should be disconnected from the electric power supply before proceeding to do any service or maintenance**.**
To service or repair your pump, please contact your local **BJM Pumps** distributor. Service should only be performed by a qualified electrician.

MAINTAINING YOUR PUMP

- Pump should be disconnected from the electric power supply before proceeding to do any service or maintenance**.**
- Pump should be inspected at regular intervals.

- More frequent inspections are required if the pump is used in a harsh environment.
- Preventative maintenance should be performed to reduce the chance of premature failure.
- Worn impellers and lip seals should be replaced.
- Cut or cracked power cords must be replaced. **(Never operate a pump with a cut, cracked or damaged power cord.)**
- Seal oil should be checked once per year.
- Maintenance should always be done when taking a pump out of service before storage.

1) Clean pump of dirt and other build up.
2) Check condition of oil around the shaft seals.
3) Check hydraulic parts: check for wear.
4) Inspect power cable. Make sure that it is free of nicks or cuts.

CHANGING SEAL OIL

Changing the seal oil in the R series pumps is very easy.

1) Make sure that the pump cable is disconnected from the power source.
2) Lay the pump down on its side.
3) Remove the screws that hold the bottom plate in place.
4) Remove bottom plate.
5) Remove screws holding the suction cover.
6) Remove the suction cover.
7) Remove the impeller.
8) Remove the inspection screw for the oil chamber (pos#50-08). Pour out a small sample of the oil. If it is milky white, or contains water, then the oil and possible, the mechanical seal, should be changed. If an oil change is needed:
9) Remove the screws that hold the oil chamber cover in place & remove the oil.
10) Replace the mechanical seal if necessary.
11) Replace the oil.
12) Assemble the pump.

EXPLODED VIEW OF R100

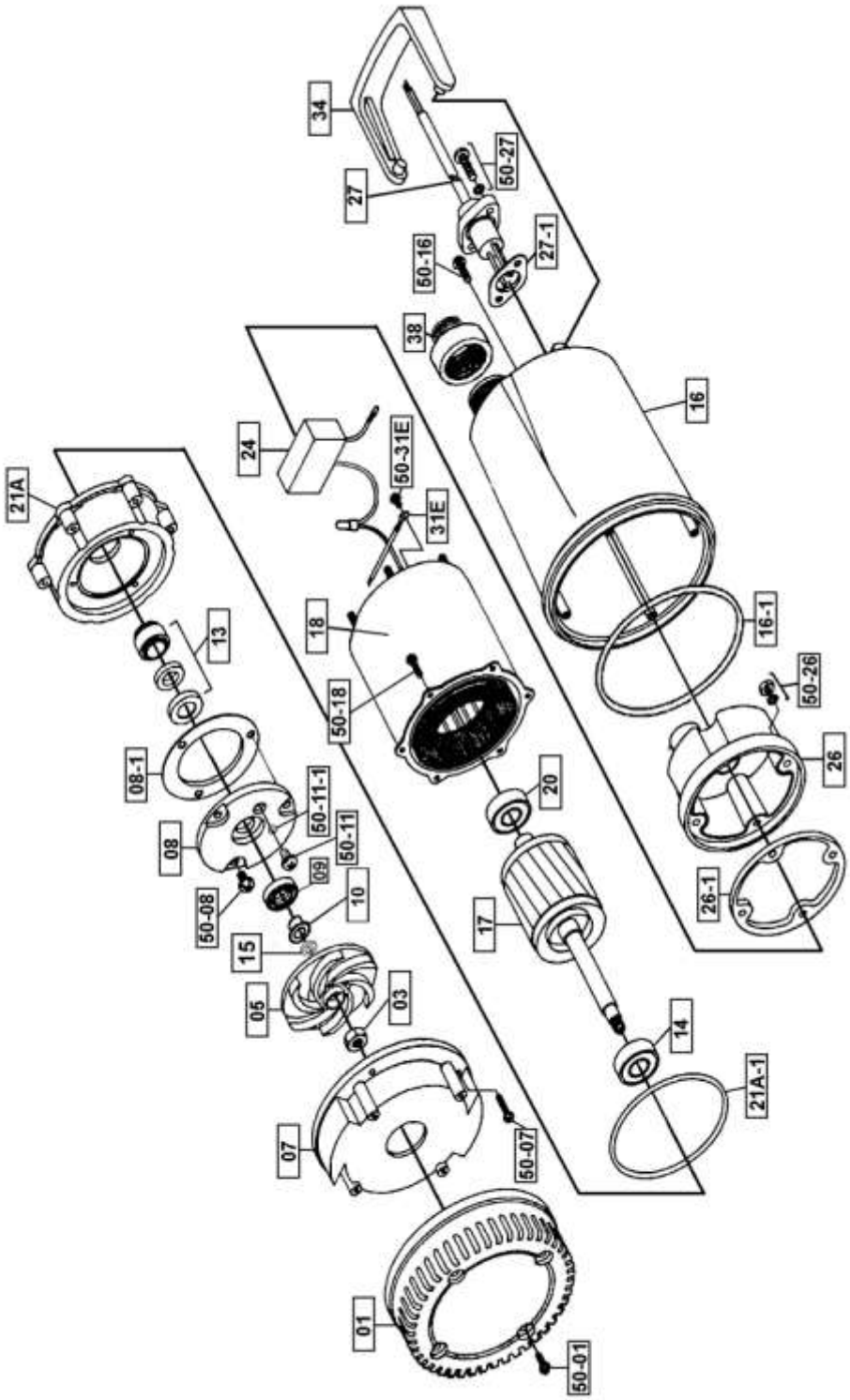

EXPLODED VIEW OF R250, R400 & R400D, R400P

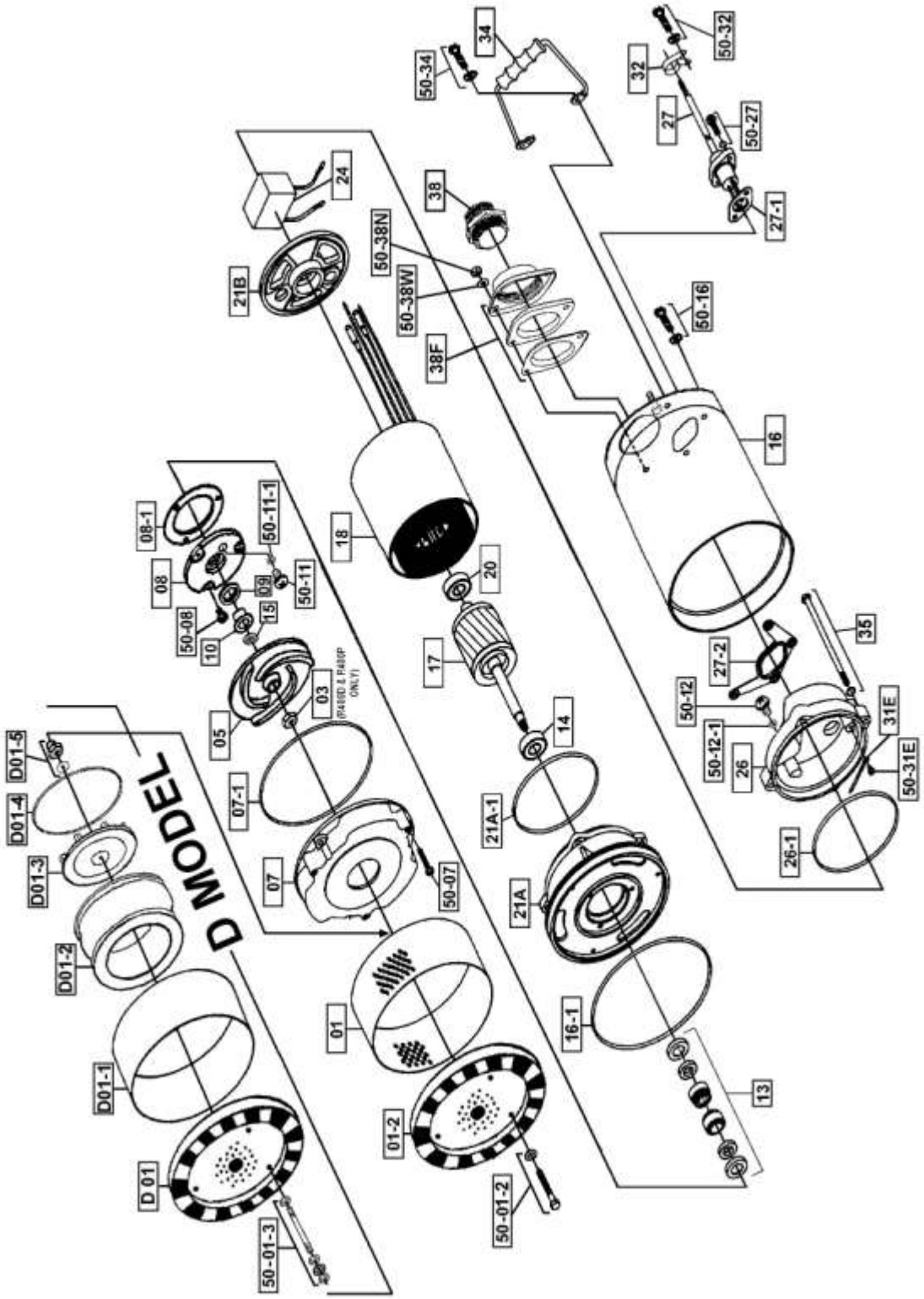

EXPLODED VIEW OF R750, RX750SS, R1500, RX1500SS, R1520 & R1530

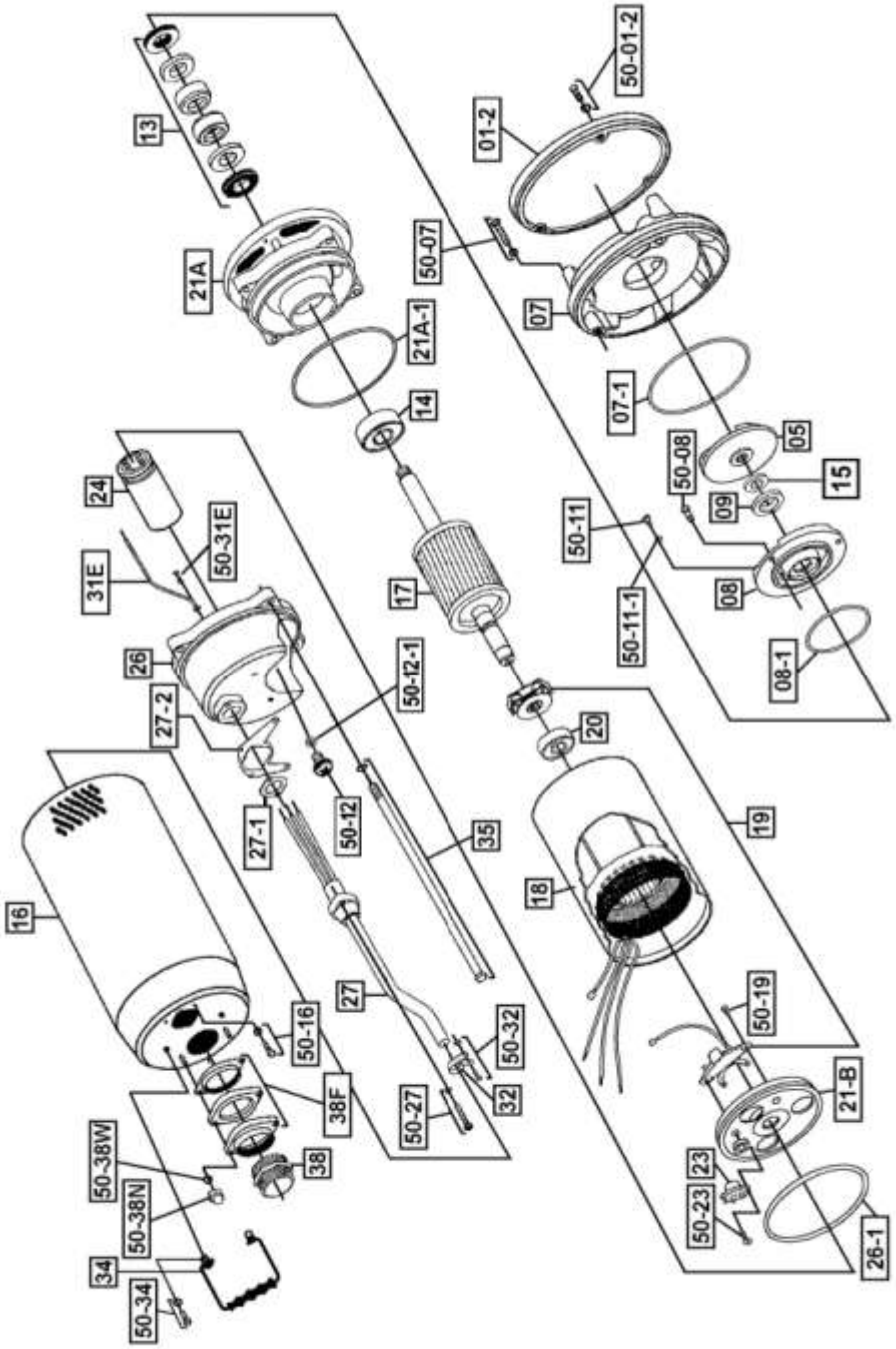

EXPLODED VIEW OF R08, RX08SS, R15, RX15SS

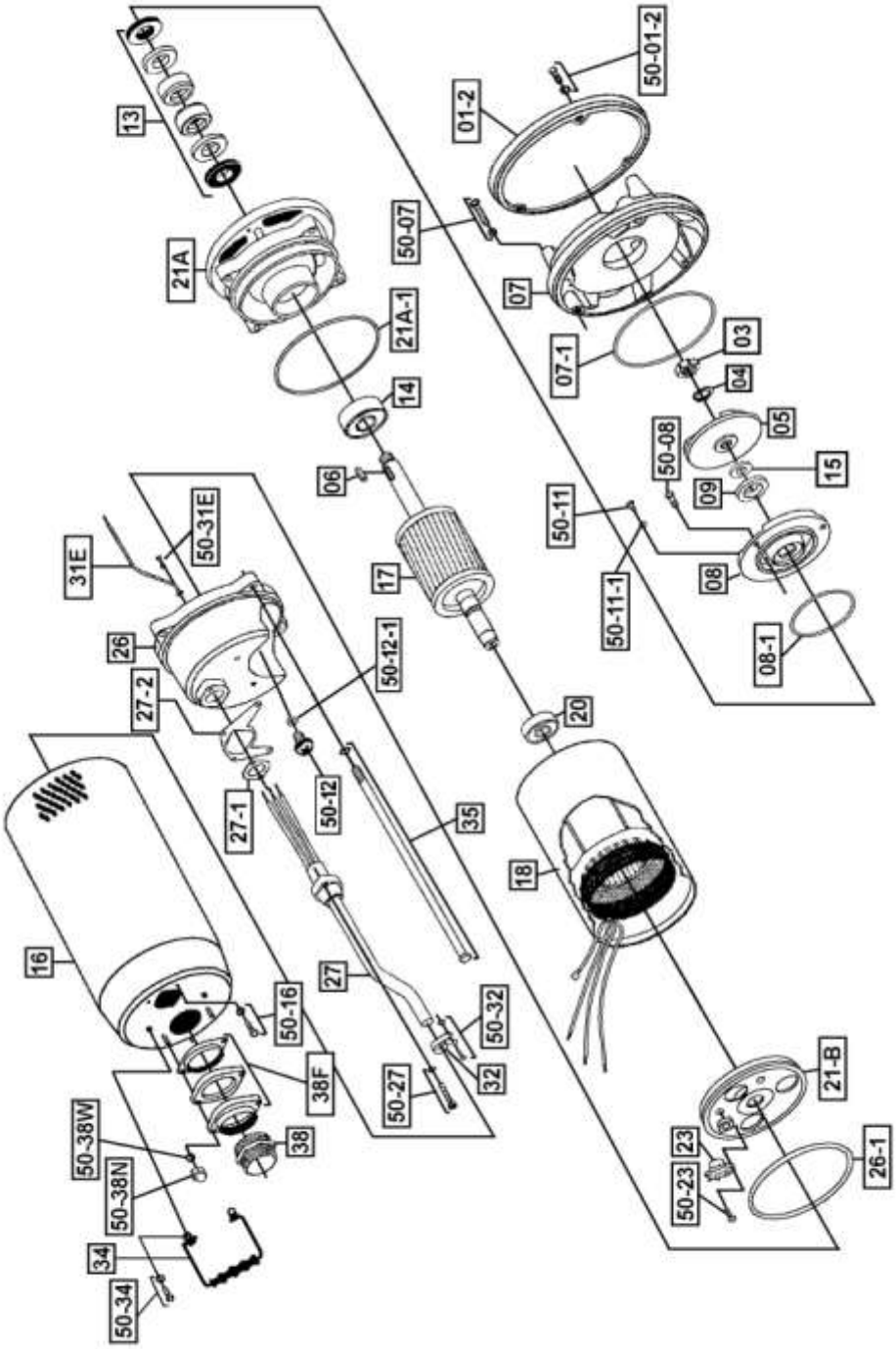

R SERIES PARTS LIST

	Pump Model	R100	R250	R400	R400D	R400P	R750	R1500	R1520	R1530	R08	R15
Pos. No.	**Part Description**	**Item #**	**Item #**	**Item #**	**Item #**	**Item #**	**Item #**	**Item #**	**Item #**	**Item #**	**Item #**	**Item #**
01	Strainer	201980	201966	201966	-	201966	-	-	-	-	-	-
D01	Bottom Plate w/ Rubber	-	-	-	202002	-	-	-	-	-	-	-
D01-1	Strainer - solid, R400D only	-	-	-	201968	-	-	-	-	-	-	-
01-2	Bottom Plate	-	202003	202003	-	202003	202004	202004	202004	202004	202004	202004
D01-2,3,4,5	Non-Return Valve Assembly	-	-	-	202017	-	-	-	-	-	-	-
03	Impeller Nut	202890	-	-	202890	202890	-	-	-	-	202894	202894
04	Lock Washer	-	-	-	-	-	-	-	-	-	202907	202907
05	Impeller Cast Iron	-	202057	202055	-	-	202930	202086	202062	202086	202088	202091
05	Impeller: Fiberglass Reinf. Plastic	202920	-	-	202054	202054	-	-	-	-	-	-
06	Impeller Key	-	-	-	-	-	-	-	-	-	202140	202140
07	Pump Housing/Suction Cover	202155	202195	202195	202195	202195	202157	202157	202157	202157	202157	202157
07-1	O-Ring (Kit Only)	Kit	Kit	Kit	Kit	Kit	Kit	Kit	Kit	Kit	Kit	Kit
08	Oil Chamber Cover	201009	202207	202207	202207	202207	202211	202211	202211	202211	202211	202211
08-1	O-Ring (Kit Only)	Kit	Kit	Kit	Kit	Kit	Kit	Kit	Kit	Kit	Kit	Kit
09	Lip Seal Buna-N	202229	202229	202229	202229	202229	202231	202231	202231	202231	202231	202231
09	Lip Seal FKM (Optional)	202230	202230	202230	202230	202230	202233	202233	202233	202233	202233	202233
09	Lip Seal EPDM (Optional)	203050	203050	203050	203050	203050	203053	203053	203053	203053	203053	203053
10	Shaft Sleeve	202258	202258	202258	202258	202258	-	-	-	-	-	-
13	Mechanical Seal Buna-N	202269	202259	202259	202259	202259	200501	200501	200501	200501	200501	200501
13	Mechanical Seal FKM**	-	202260	202260	202260	202260	200500	200500	200500	200500	200500	200500
14	Lower Ball Bearing	200957	200493	200493	200493	200493	200958	200958	200958	200958	200958	200958
15	Impeller Shim Kit	-	-	-	-	-	200481	200481	200481	200481	200480	200480
16	Pump Casing Outer	202286	202287	202287	202287	202287	202290	202293	202293	202293	202290	202290
16-1	O-Ring (Kit Only)	Kit	Kit	Kit	-	Kit	-	-	-	-	-	-
17	Rotor w/ Shaft 115, 1PH	N/A	202305	202300	202300	202300	203086	-	-	-	-	-
17	Rotor w/ Shaft 230, 1PH	-	-	202300	202300	202300	203086	203091	203091	203091	-	-
17	Rotor w/ Shaft, 3PH	-	-	-	-	-	-	-	-	-	203102	202341
18	Stator Coil w/ Casing 115, 1PH	N/A	1810	200508	200508	200508	200511	-	-	-	-	-
18	Stator Coil w/ Casing 230, 1PH	-	-	200523	200523	200523	200570	200514	200514	200514	-	-
18	Stator w/ Casing 208, 3PH	-	-	-	-	-	-	-	-	-	200659	200662
18	Stator w/ Casing 230/460V, 3PH	-	-	-	-	-	-	-	-	-	200626	200633
18	Stator w/ Casing 575V, 3PH	-	-	-	-	-	-	-	-	-	200640	200643
19	Governor Switch w/Switch Plate	-	-	-	-	-	202360	202360	202360	202360	-	-
20	Upper Ball Bearing	200966	200957	200957	200957	200957	200967	200967	200967	200967	200967	200967
21A	Oil Chamber	203006	200499	200499	200499	200499	202160	202160	202160	202160	202160	202160
21A-1	O-Ring (Kit Only)	Kit	Kit	Kit	Kit	Kit	Kit	Kit	Kit	Kit	Kit	Kit
21B	Motor Cover (Upper)	-	204154	204154	204154	204154	202366	202366	202366	202366	202366	202366
23	Overload 115V, 1PH	-	-	-	-	-	202383	-	-	-	-	-
23	Overload 230V, 1PH	-	-	-	-	-	202395	202383	202383	202383	-	-
23	Overload 208V, 3PH	-	-	-	-	-	-	-	-	-	202385	202388

23	Overload 230V, 3PH	-	-	-	-	-	-	-	-	-	202385	202388
23	Overload 460V, 3PH	-	-	-	-	-	-	-	-	-	202387	202386
23	Overload 575V, 3PH	-	-	-	-	-	-	-	-	-	202399	202387
24	Capacitor 115	202411	202412	202422	202422	202818	202417	-	-	-	-	-
24	Capacitor 230	-	-	202423	202423	202423	202418	202420	202420	202420	-	-
26	Pump Top Cover	202432	202425	202425	202425	202425	202429	202429	202429	202429	202429	202429
26-1	O-Ring (Kit Only)	Kit	Kit	Kit	Kit	Kit	Kit	Kit	Kit	Kit	Kit	Kit
27	Power Cable w/ Gland - 115V, 1 PH	201682	201682	204257	204257	204257	204259	-	-	-	-	-
27	Power Cable w/ Gland - 230V, 1 PH, No Plug	-	-	201684	201684	201684	204260	204260	204260	204260	-	-
27	Power Cable w/ Gland - 3 PH	-	-	-	-	-	-	-	-	-	201697	201697
27-1	O-Ring (Kit Only)	Kit	Kit	Kit	Kit	Kit	Kit	Kit	Kit	Kit	Kit	Kit
27-2	O-Ring (Kit Only)	-	Kit	Kit	Kit	Kit	Kit	Kit	Kit	Kit	Kit	Kit
31E	Ground Wire w/Ring Term.	203145	203145	203145	203145	203145	203145	203145	203145	203145	203145	203145
32	Power Cord Line Clip	-	203161	203161	203161	203161	203161	203161	203161	203161	203161	203161
34	Handle	203168	203169	203169	203169	203169	203169	203169	203169	203169	203169	203169
35	Rod Bolts	-	202675	202675	202675	202675	202666	202668	202668	202668	202666	202666
38	Disch. 3/4" Garden Hose Adapter	202608	-	-	-	-	-	-	-	-	-	-
38	Disch. Nipple NPT Cast Iron 1-1/2"	-	202551	202551	202551	202551	-	-	-	-	-	-
38	Disch. Nipple NPT Cast Iron 2"	-	-	202531	202531	202531	202531	202531	-	-	202531	202531
38	Disch. NPT 3", Male	-	-	-	-	-	-	-	202547	202547	-	-
38F	Discharge Flange Kit 1-1/2"	-	202565	202565	202565	202565	202565	202565	-	-	202565	202565
38F	Discharge Flange Kit 2"	-	-	202567	202567	202567	202567	202567	202567	202567	202567	202567
50-01	Screw for Strainer	202691	-	-	-	-	-	-	-	-	-	-
50-01-2	Screw for Bottom Plate	-	202689	202689	-	202689	203220	203220	203220	203220	203220	203220
50-01-3	Stud with Nuts (R400D)	-	-	-	202688	-	-	-	-	-	-	-
50-07	Screw for Suction Cover	203233	203239	203239	203239	203239	203250	203250	203250	203250	203250	203250
50-08	Screw for Oil Chamber Cover	202702	203215	203215	203215	203215	203219	203219	203219	203219	203219	203219
50-11	Screw for Oil Fill	203218	203218	203218	203218	203218	203218	203218	203218	203218	203218	203218
50-11-1	O-Ring (Kit Only)	Kit	Kit	Kit	Kit	Kit	Kit	Kit	Kit	Kit	Kit	Kit
50-12	Screw - Pressure Test	-	203218	203218	203218	203218	203218	203218	203218	203218	203218	203218
50-12-1	O-Ring (Kit Only)	-	Kit	Kit	Kit	Kit	Kit	Kit	Kit	Kit	Kit	Kit
50-16	Screw for Outer Casing	202699	203220	203220	203220	203220	203220	203220	203220	203220	203220	203220
50-18	Screw for Stator	202702	-	-	-	-	-	-	-	-	-	-
50-19	Screw for Gov. Switch Plate	-	-	-	-	-	202693	202693	202693	202693	-	-
50-23	Screw for Overload	-	-	-	-	-	202700	202700	202700	202700	202700	202700
50-26	Nut and Washer for Top Cover	202701	-	-	-	-	-	-	-	-	-	-
50-27	Screw for Power Cord	203232	203216	203216	203216	203216	203216	203216	203216	203216	203216	203216
50-31E	Screw for Ground Wire	202692	202692	202692	202692	202692	202692	202692	202692	202692	202692	202692
50-32	Screw for Line Clip	-	203220	203220	203220	203220	203220	203220	203220	203220	203220	203220
50-34	Screw for Handle	-	203220	203220	203220	203220	203220	203220	203220	203220	203220	203220
50-38N	Acorn Nut for Flange	-	203182	203182	203182	203182	203182	203182	203182	203182	203182	203182
50-38W	Washer for Flange	-	202902	202902	202902	202902	202902	202902	202902	202902	202902	202902
	O-Ring Kit - Buna N	202622	202624	202624	202624	202624	202632	202632	202632	202632	202632	202632

RX SERIES PARTS LIST

	Pump Model	RX750SS	RX1500SS	RX08SS	RX15SS
Pos. No.	**Part Description**	**Item #**	**Item #**	**Item #**	**Item #**
01-2	Bottom Plate	202006	202006	202006	202006
03	Impeller Nut	-	-	202894	202894
04	Lock Washer	-	-	202907	202907
05	Impeller	202061	202087	202090	202092
06	Impeller Key	-	-	202140	202140
07	Pump Housing/Suction Cover	202159	202159	202159	202159
07-1	O-Ring (Kit Only)	Kit	Kit	Kit	Kit
08	Oil Chamber Cover	202215	202215	202215	202215
08-1	O-Ring (Kit Only)	Kit	Kit	Kit	Kit
09	Lip Seal FKM	202233	202233	202233	202233
09	Lip Seal Buna-N (Optional)	202231	202231	202231	202231
09	Lip Seal EPDM (Optional)	203053	203053	203053	203053
13	Mechanical Seal FKM**	204240	204240	204240	204240
13	Mechanical Seal Buna-N (Optional)	200501	200501	200501	200501
14	Lower Ball Bearing	200958	200958	200958	200958
15	Impeller Shim Kit	200481	200481	200480	200480
16	Pump Casing Outer	202292	202294	202292	202292
17	Rotor w/ Shaft 115, 1PH	203090	-	-	-
17	Rotor w/ Shaft 230, 1PH	203090	202304	-	-
17	Rotor w/ Shaft, 3PH	-	-	203103	202342
18	Stator Coil w/ Casing 115, 1PH	200513	-	-	-
18	Stator Coil w/ Casing 230, 1PH	200571	200516	-	-
18	Stator w/ Casing 208V, 3PH	-	-	200660	200663
18	Stator w/ Casing 230/460V, 3PH	-	-	200627	200634
18	Stator w/ Casing 575V, 3PH	-	-	200641	200644
19	Governor Switch w/Switch Plate	202360	202360	-	-
20	Upper Ball Bearing	200967	200967	200967	200967
21A	Oil Chamber	202161	202161	202161	202161
21A-1	O-Ring (Kit Only)	Kit	Kit	Kit	Kit
21B	Motor Cover (Upper)	202366	202366	202366	202366
23	Overload 115V, 1PH	202383	-	-	-
23	Overload 230V, 1PH	202395	202383	-	-
23	Overload 208V, 3PH	-	-	202385	202388
23	Overload 230V, 3PH	-	-	202385	202388

23	Overload 460V, 3PH	-	-	202387	202386
23	Overload 575V, 3PH	-	-	202399	202387
24	Capacitor 115	202417	-	-	-
24	Capacitor 230	202418	202420	-	-
26	Pump Top Cover	202430	202430	202430	202430
26-1	O-Ring (Kit Only)	Kit	Kit	Kit	Kit
27	Power Cable w/ Gland-115V, 1PH	201692	-	-	-
27	Power Cable w/ Gland- 230V, 1PH, No Plug	201691	201691	-	-
27	Power Cable w/ Gland- 3PH	-	-	201698	201698
27-1	O-Ring (Kit Only)	Kit	Kit	Kit	Kit
27-2	O-Ring (Kit Only)	Kit	Kit	Kit	Kit
31E	Ground Wire w/Ring Term.	203145	203145	203145	203145
32	Power Cord Line Clip	203161	203161	203161	203161
34	Handle	203169	203169	203169	203169
35	Rod Bolts	202666	202668	202666	202666
38	Disch. Nipple NPT 2"	202532	202532	202532	202532
38F	Discharge Flange Kit 1-1/2"	202566	202566	202566	202566
38F	Discharge Flange Kit 2"	202568	202568	202568	202568
50-01-2	Screw for Bottom Plate	203220	203220	203220	203220
50-07	Screw for Suction Cover	203250	203250	203250	203250
50-08	Screw for Oil Chamber Cover	203219	203219	203219	203219
50-11	Screw for Oil Fill	203218	203218	203218	203218
50-11-1	O-Ring (Kit Only)	Kit	Kit	Kit	Kit
50-12	Screw - Pressure Test	203218	203218	203218	203218
50-12-1	O-Ring (Kit Only)	Kit	Kit	Kit	Kit
50-16	Screw for Outer Casing	203220	203220	203220	203220
50-18	Screw for Stator	-	-	-	-
50-19	Screw for Gov. Switch Plate	202693	202693	-	-
50-23	Screw for Overload	202700	202700	202700	202700
50-27	Screw for Power Cord	203216	203216	203216	203216
50-31E	Screw for Ground Wire	202692	202692	202692	202692
50-32	Screw for Line Clip	203220	203220	203220	203220
50-34	Screw for Handle	203220	203220	203220	203220
50-38N	Acorn Nut for Flange	203182	203182	203182	203182
50-38W	Washer for Flange	202902	202902	202902	202902
	O-Ring Kit - FKM	202633	202633	202633	202633

SINGLE PHASE WIRING DIAGRAM 115V & 230V W/O GOVERNOR SWITCH

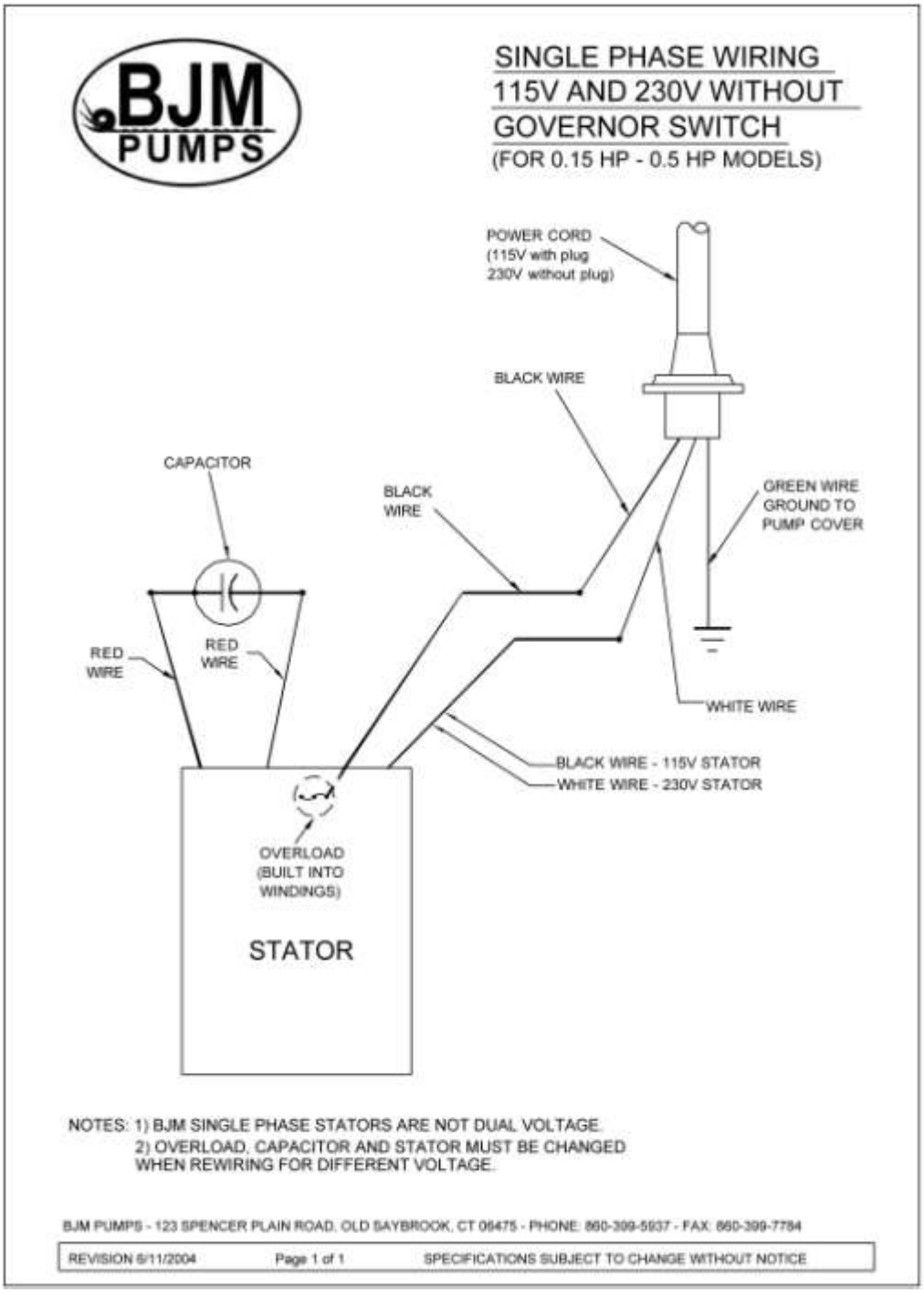

MODELS R100, R250, R400 R400D, R400P

SINGLE PHASE WIRING DIAGRAM 115V & 230V W/GOVERNOR SWITCH

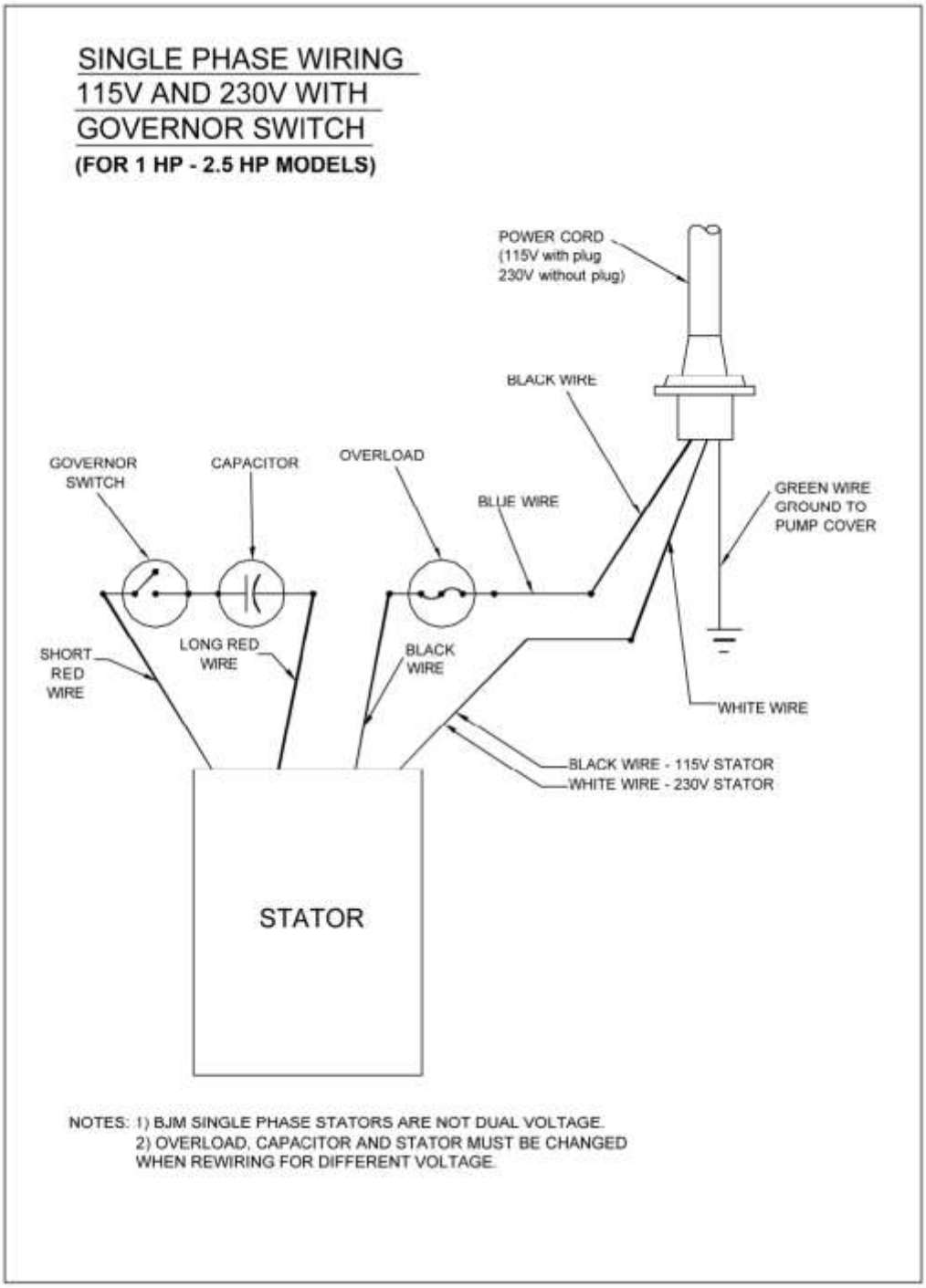

MODELS R750, RX750SS, R1500, RX1500SS, R1520 & R1530

THREE PHASE WIRING DIAGRAM

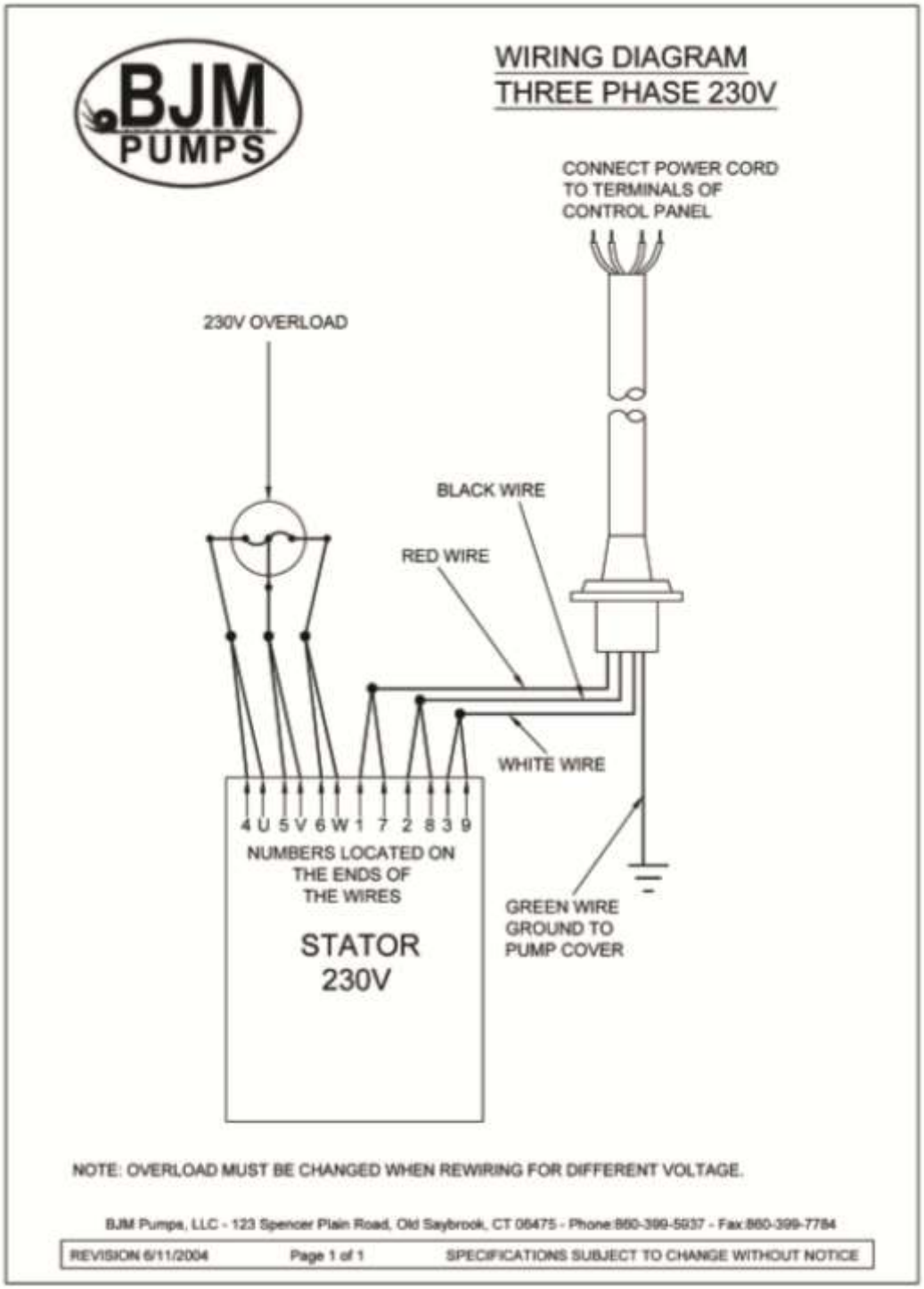

MODELS R08, RX08SS, R15, RX15SS (230V)

THREE PHASE WIRING DIAGRAM

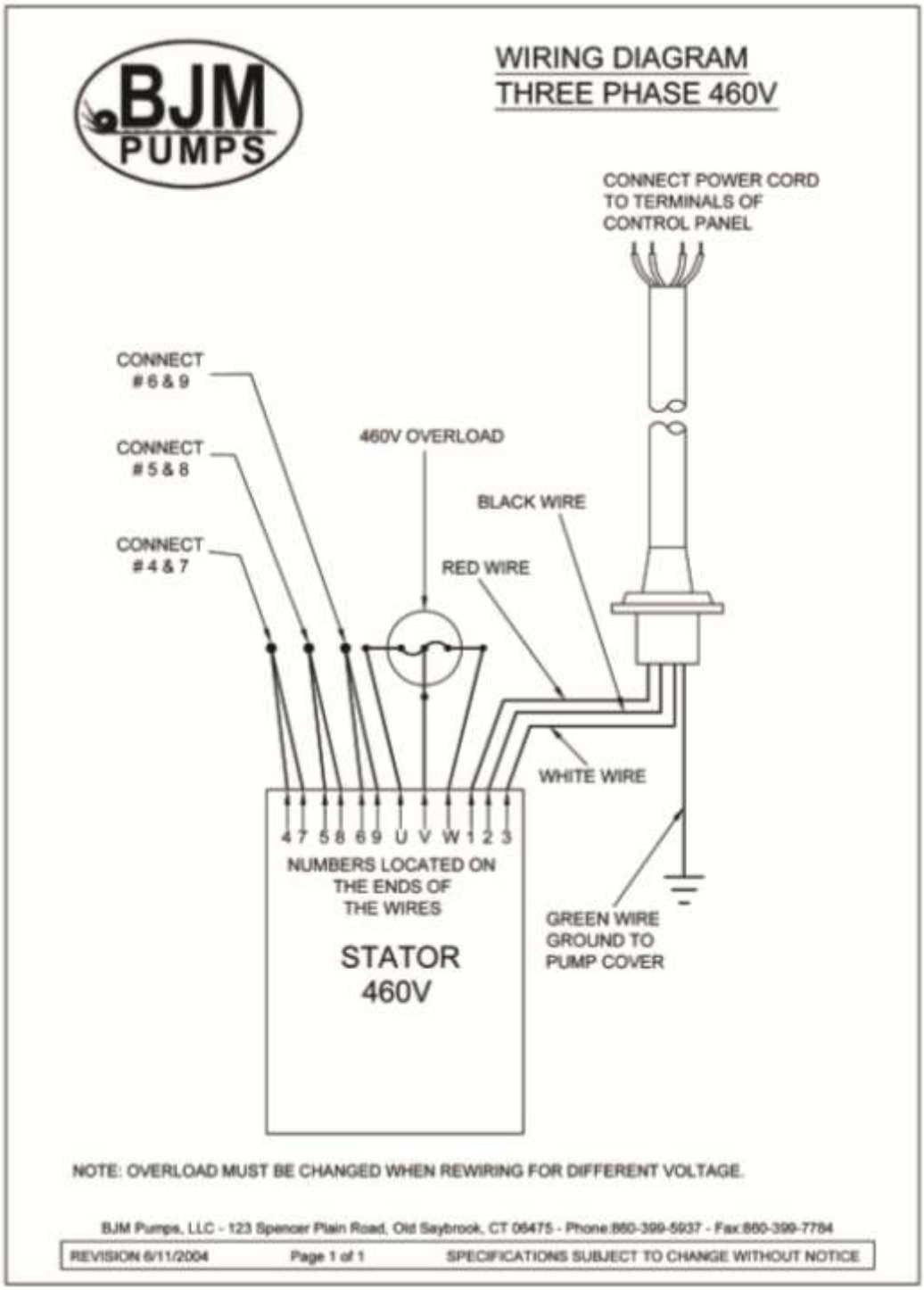

MODELS R08, RX08SS, R15, RX15SS(460V)

BJM PUMPS, LLC
123 Spencer Plain Road
Old Saybrook, CT 06475, U.S.A.

WARRANTY AND LIMITATION OF LIABILITY

Unless otherwise expressly authorized in writing, specifying a longer or shorter period, BJM Pumps, LLC warrants for a period of eighteen (18) months from the date of shipment from the Point of Shipment, or one (1) year from the date of installation, whichever occurs first, that all products or parts thereof furnished by BJM Pumps, LLC under the brand name **BJM Pumps**, hereinafter referred to as the "Product" are free from defects in materials and workmanship and conform to the applicable specification.

BJM Pumps, LLC's liability for any breach of this warranty shall be limited solely to replacement or repair, at the sole option of BJM Pumps, LLC, of any part or parts of the Product found to be defective during the warranty period, provided the Product is properly installed and is being used as originally intended. Any breach of this warranty must be reported to BJM Pumps, LLC or BJM Pumps, LLC's authorized service representative within the aforementioned warranty period, and defective Product or parts thereof must be shipped to BJM Pumps, LLC or BJM Pumps, LLC's authorized representative, transportation charges prepaid. Any cost associated with removal or installation of a defective Product or part is excluded.

IT IS EXPRESSLY AGREED THAT THIS SHALL BE THE SOLE AND EXCLUSIVE REMEDY OF BJM PUMPS, LLC'S DISTRIBUTORS AND CUSTOMERS. UNDER NO CIRCUMSTANCES SHALL BJM PUMPS, LLC BE LIABLE FOR ANY COSTS, LOSS, EXPENSE, DAMAGES, SPECIAL DAMAGES, INCIDENTAL DAMAGES OR CONSEQUENTIAL DAMAGES ARISING DIRECTLY OR INDIRECTLY FROM THE DESIGN, MANUFACTURE, SALE, USE OR REPAIR OF THE PRODUCT, WHETHER BASED ON WARRANTY, CONTRACT, NEGLIGENCE, OR STRICT LIABILITY. IN NO EVENT WILL LIABILITY EXCEED THE PURCHASE PRICE OF THE PRODUCT.

THE WARRANTY AND LIMITS OF LIABILITY CONTAINED HEREIN ARE IN LIEU OF ALL OTHER WARRANTIES AND LIABILITIES, EXPRESSED OR IMPLIED. ALL IMPLIED WARRANTIES OF MERCHANTABILITY AND FITNESS FOR A PARTICULAR PURPOSE ARE HEREBY DISCLAIMED BY BJM PUMPS, LLC AND EXCLUDED FROM THIS WARRANTY.

BJM Pumps, LLC neither assumes, nor authorizes any person to assume for it, any other warranty obligation in connection with the sale of the Product. This warranty shall not apply to any Product or parts of Product which have (a) been repaired or altered outside of BJM Pumps, LLC's facilities unless such repair was authorized in advance by BJM Pumps, LLC or by its authorized representative; or (b) have been subject to misuse, negligence or accident; or (c) have been used in a manner contrary to BJM Pumps, LLC's instruction.

In any case of products not manufactured and sold under the BJM Pumps, LLC brand name, there is no warranty from BJM Pumps, LLC; however BJM Pumps, LLC will extend any warranty received from BJM Pumps, LLC's supplier of such products.

START-UP REPORT FORM

This form is designed to record the initial installation, and to serve as a guide for troubleshooting at a later date (if needed).

BJM Pumps, LLC
123 Spencer Plain Road
Old Saybrook, CT. 06475

Pump Owner's Name			
Location of Installation			
Person in Charge		Phone( )	
Purchased From			
Model	Serial No		
Voltage	Phase	Hertz	HP
Does impeller turn freely by hand?	☐ Yes ☐ No		
Condition of Equipment	☐ New ☐ Good ☐ Fair ☐ Poor		
Condition of Cable Jacket	☐ New ☐ Good ☐Fair ☐ Poor		
Rotation: Direction of Impeller Rotation (Use C/W for clockwise, CC/W for counterclockwise): _____ Method used to check rotation (viewed from bottom) _____			
Resistance of cable and Pump Motor (measured at pump control)			
Red-Black_____ ohms	Red-White_____ ohms	White-Black____ohms	
Resistance of ground circuit between control panel and outside of pumps _____ Ohms			
MEG OHM CHECK OF INSULATION Red to ground_____ White to ground_____ Black to ground_____			
Condition of location at start-up	☐ Dry ☐ Wet ☐Muddy		
Was equipment stored If YES, length of storage:	☐ Yes ☐ No.		
Liquid being pump			
Debris in bottom of station?	☐ Yes ☐ No		
Was debris removed in your	☐ Yes ☐ No		

presence?	
Are guide rails exactly vertical?	☐ Yes ☐ No
Is base elbow installed level?	☐ Yes ☐ No
Liquid level controls: Model_____	
Is control installed away from turbulence?	☐ Yes ☐ No

Operation Check
Tip lowest float (stop float), all pumps should remain off. Tip second float (and stop float), one pump comes on. Tip third float (and stop float), both pumps on (alarm on simplex). Tip fourth float (and stop float), high level alarm on (omit on simplex).
If not on levels controls, describe type of controls

Does liquid level ever drop below volute top?	☐ Yes ☐ No
Control Panel MFG & model no.	
Number of pumps operated by control panel	

NOTE: At no time should hole be made in top of control panel, unless proper sealing devices are utilized.

Short Circuit protection:	Type:	
Number and size of short circuit device(s)	Amp rating:	
Overload type:	Size:	Amp rating:
Do protective devices comply with pump motor amp rating?	☐ Yes ☐ No	
Are all pump connections tight?	☐ Yes ☐ No	
Is the interior of the panel dry?	☐ Yes ☐ No If No, correct moisture problem.	

Electrical readings

SINGLE PHASE		
Voltage supply at panel line connection, pump off	L1	L2
Voltage supply at panel line connection, pump on	L1	L2
Amperage load connection, pump on	L1	L2

THREE PHASE		
Voltage supply at panel line connection, pump off		
L1-L2	L2-L3	L3-L1

START-UP REPORT FORM

Voltage supply at panel line connection, pump on		
L1-L2	L2-L3	L3-L1
Amperage load connection, pump on		
L1	L2	L3

FINAL CHECK		
Is pump secured properly?	☐ Yes	☐ No
Was pump checked for leaks?	☐ Yes	☐ No
Do check valves operate properly?	☐ Yes	☐ No
Flow: Does station appear to operate at proper rate?	☐ Yes	☐ No
Noise level:	Acceptable ☐	Unacceptable ☐

Comments:

Describe and equipment difficulties during start-up

Installed by:

Company: _____

Person: _____

Date: _____

Maintained by:

Company: _____

Person: _____

Date and time of start-up_____

Present at start-up:

( ) Engineer's name_____

( )Contractor's name_____

( ) Operator's name_____

( ) others_____

NOTES:

BJM Pumps, LLC
123 Spencer Plain Road • PO Box 1138 • Old Saybrook, CT 06475, USA
• Phone: (860) 399-5937 • Fax: (860) 399-7784
Email: sales@bjmpumps.com • Web Site: www.bjmpumps.com

BJM Pumps is a registered trademark of BJM Pumps, LLC.
Copyright © 2006-2013 BJM Pumps, LLC All rights reserved.

Visit our website: www.bjmpumps.com

2/20/2014
0814
Supersedes
0813

TECHNICAL DATA
MODEL R400D-115
BJM SUBMERSIBLE PUMP-CAST IRON

115V

GENERAL DATA

MAX. FLOW: GPM (L/min)	50 GPM (189 L/min)
MAX. HEAD: ft (m)	36’ (10.9 m)
MAX. SUBMERSION DEPTH: ft (m)	65’ (20m) or limited to length of power cord, Consult factory for deeper depths
PUMP TYPE	TOP DISCHARGE, DEWATERING
SOLID SIZE	N/A
STRAINER OPENING	N/A
PUMP DOWN WATER LEVEL: in (mm)	1/12” (2.12 mm)
IMPELLER DIAMETER: in (mm)	3.75” (95 mm)
DISCHARGE SIZE	2” NPT-MALE
PUMP WEIGHT, without cable: lbs (kg)	29 lbs (13.2 kg)
SHIPPING WEIGHT: lbs (kg)	33 lbs (15 kg)

CONSTRUCTION/MATERIAL DATA

MECHANICAL SEAL - UPPER	CARBON/CERAMIC
MECHANICAL SEAL - LOWER	SILICON CARBIDE/SILICON CARBIDE
OUTER CASING	304 SS
MOTOR CASING	304 SS
PUMP VOLUTE	CAST IRON
IMPELLER- MULTI VANE	FIBERGLASS REINFORCED PLASTIC
STRAINER	NONE
BOTTOM PLATE	RUBBER COATED CAST IRON
LIPSEAL & O-RINGS	BUNA-N
ROTOR SHAFT	304 SS
EXTERNAL HARDWARE	304 SS
QTY. OIL IN SEAL CHAMBER	1.35 U.S. FL. OZ. (40 C.C.)
BALL BEARING: PERM. LUBE. UPPER	6201
BALL BEARING: PERM. LUBE. LOWER	6201

ELECTRICAL /MOTOR DATA

MOTOR: TYPE, RATING HP	SUBMERSIBLE, 0.5 (CONTINUOUS DUTY)
MOTOR RPM	3450
MOTOR INSULATION CLASS	F
MOTOR SERVICE FACTOR	1.1
VOLTAGE[1]	115, 1 PH, 60 Hz
CURRENT F.L.A.	6
LOCKED ROTOR CURRENT (LRA)	22
MOTOR PROTECTION	THERMAL BREAKER
POWER CORD: GAGE; LENGTH	A.W.G. 16/3; 33’ (10 m), STOW
MAXIMUM LIQUID TEMPERATURE	104°F (40°C)

1- Available in other voltages (and in 50 Hz).

©2004 - 2014 BJM Pumps, LLC. All rights reserved.

123 Spencer Plain Road
Old Saybrook, CT. 06475, USA
(860)399-5937 - (877) BJM-PUMP - Fax: (860)399-7784

REFER TO REVERSE SIDE FOR PUMP PERFORMANCE CURVES
SPECIFICATIONS SUBJECT TO CHANGE WITHOUT NOTICE

MODEL: R400D

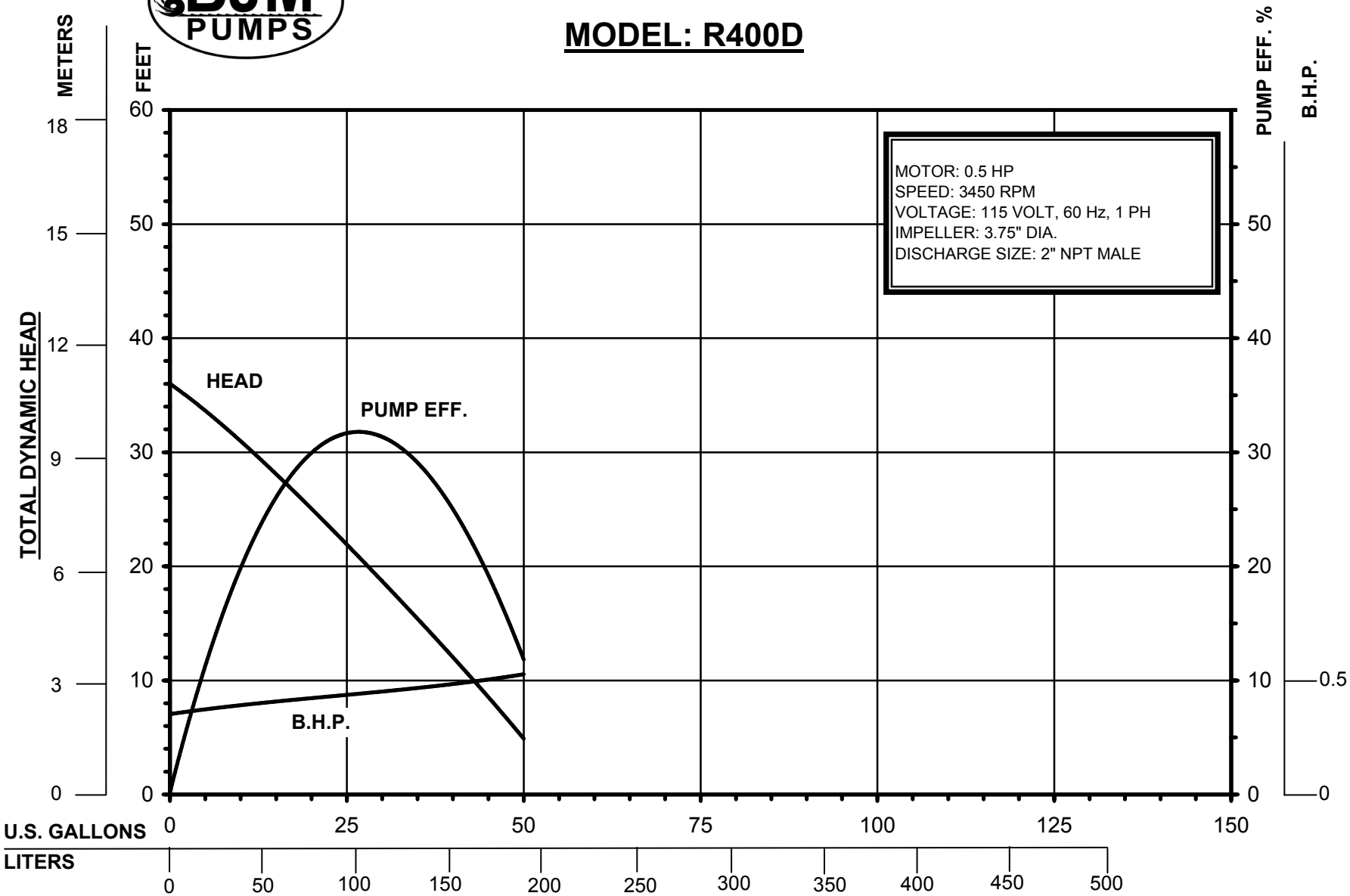

2/17/2006 supersedes priors

FLOW RATE PER MINUTE

SPECIFICATIONS SUBJECT TO CHANGE WITHOUT NOTICE

© 2004 - 2006 BJM Pumps, LLC. All rights reserved.