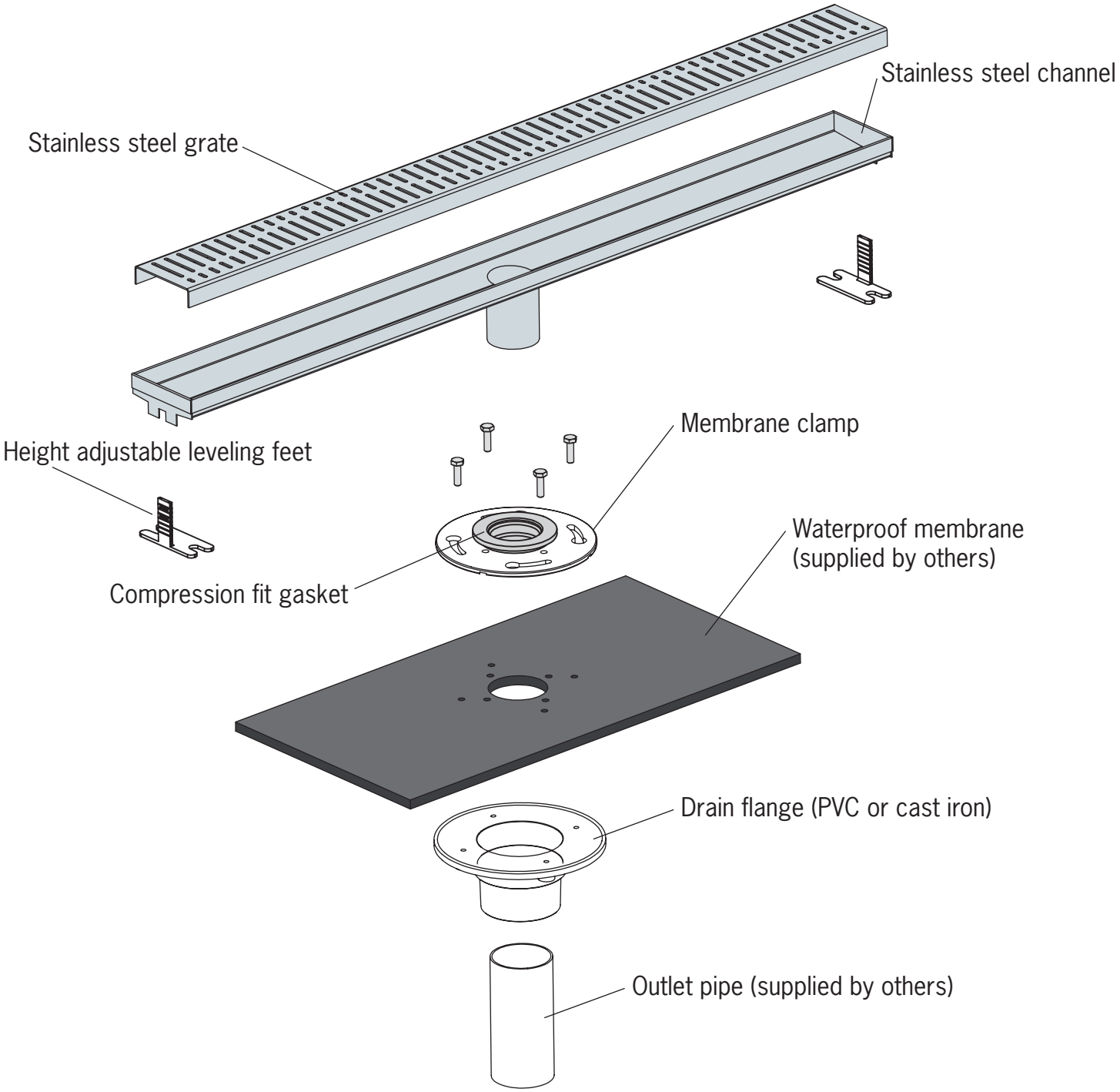
Stainless steel channel
Stainless steel grate
Membrane clamp
Height adjustable leveling feet
Waterproof membrane
(supplied by others)
Compression fit gasket
Drain flange (PVC or cast iron)
Outlet pipe (supplied by others)

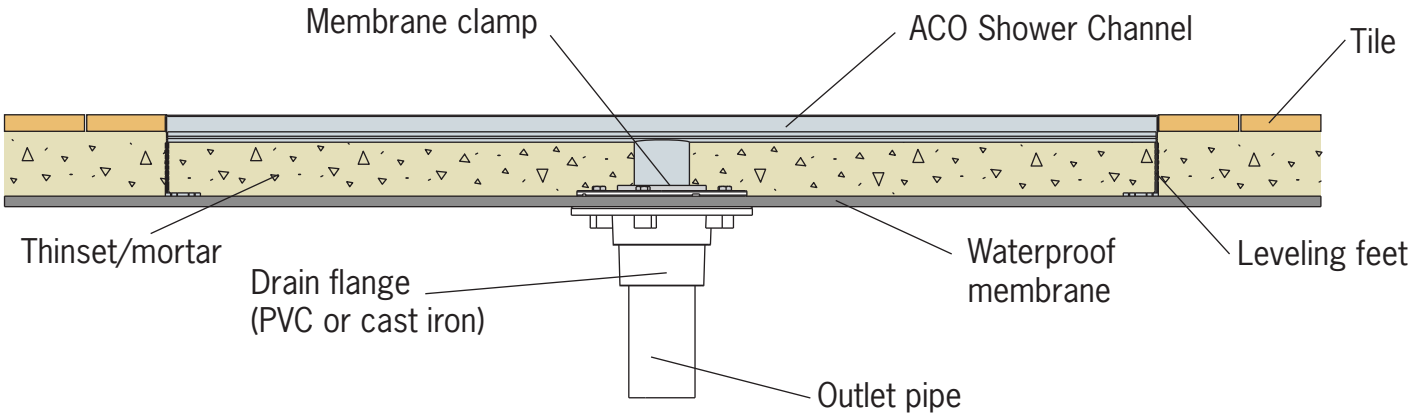
Membrane clamp
ACO Shower Channel
Tile
Thinset/mortar
Drain flange
(PVC or cast iron)
Waterproof
membrane
Leveling feet
Outlet pipe