Operator's Instruction Manual

EDCO POWER TROWELS

Manual - Portable

EDCO
A Division of Equipment Development Company, Inc.
CONTRx Systems

100 Thomas Johnson Drive, Frederick, MD 21702-4600 USA
Phone (301) 663-1600 • 1-800-638-3326
Fax (301) 663-1607 • 1-800-447-3326
Website: www.edcoinc.com
Email: sales@edcoinc.com

Printed in USA

TVW ©2011

READ AND UNDERSTAND THE OPERATORS INSTRUCTION MANUAL *THOROUGHLY* BEFORE ATTEMPTING TO OPERATE THIS EQUIPMENT.
Death or serious injury could occur if this machine is used improperly.

SAFETY MESSAGES

• Safety Instructions are proceeded by a graphic alert symbol of DANGER, WARNING, or CAUTION.

DANGER — Indicates an imminent hazard which, if not avoided, will result in death or serious injury.

WARNING — Indicates an imminent hazard which, if not avoided, can result in death or serious injury.

CAUTION — Indicates hazards which, if not avoided, could result in serious injury and or damage to the equipment.

GASOLINE/PROPANE POWERED EQUIPMENT

WARNING

• Engine exhaust from this product contains chemicals known to the State of California to cause cancer, birth defects or other reproductive harm.

• Gasoline is extremely flammable and poisonous. It should only be dispensed in well ventilated areas, and with a cool engine.

- Small gasoline engines produce high concentrations of carbon monoxide (CO) example: a 5 HP 4 cycle engine operation in an enclosed 100,000 cu. ft. area with only one change of air per hour is capable of providing deadly concentrations of CO in less than fifteen minutes. Five changes of air in the same area will produce noxious fumes in less than 30 minutes. Gasoline or propane powered equipment should not be used in enclosed or partially enclosed areas. Symptoms of CO poisoning include, headache, nausea, weakness, dizziness, visual problems and loss of consciousness. If symptoms occur - get into fresh air and seek medical attention immediately.

ELECTRICAL POWERED EQUIPMENT

Extreme care must be taken when operating electric models with water present: Ensure power cord is properly grounded, is attached to a Ground-Fault-Interrupter (GFI) outlet, and is undamaged.

- Check all electrical cables - be sure connections are tight and cable is continuous and in good condition. Be sure cable is correctly rated for both the operating current and voltage of this equipment.
- Improper connection of the equipment-grounding conductor can result in a risk of electric shock. Check with qualified electrician or service person if there is any doubt as to whether the outlet is properly grounded. Adhere to **all** local codes and ordinances.
- **NOTE:** In the event of a malfunction or breakdown, grounding provides a path of least resistance for the electric current to dissipate. The motor is equipped with a grounded plug and must be connected to an outlet that is properly installed and properly grounded. DO NOT modify the plug provided on the motor. If the plug does not fit the outlet have a qualified electrician install the proper receptacle.
- Switch motor OFF **before** disconnecting power.
- Do not disconnect power by pulling cord. To disconnect, grasp the plug, not the cord.
- Unplug power cord at the machine when not in use and before servicing.

GENERAL INSTRUCTIONS

- Equipment should only be operated by trained personnel in good physical condition and mental health (not fatigued). The operator and maintenance personnel must be physically able to handle the bulk weight and power of this equipment.
- This is a one person tool. Maintain a safe operating distance to other personnel. It is the **operators' responsibility** to keep other people (workers, pedestrians, bystanders, etc.) away during operation. Block off the work area in all directions with roping, safety netting, etc. for a safe distance. Failure to do so may result in others being injured by flying debris or exposing them to harmful dust and noise.
- This equipment is intended for commercial use only.
- For the operator's safety and the safety of others, always keep all guards in place during operation.
- Never let equipment run unattended.

- Personal Protection Equipment and proper safety attire must be worn when operating this machinery. The operator must wear approved safety equipment appropriate for the job such as hard hat and safety shoes when conditions require. Hearing protection MUST be used (operational noise levels of this equipment may exceed 90db). Eye protection MUST be worn at all times.

Keep body parts and loose clothing away from moving parts. Failure to do so could result in dismemberment or death.

- Do not modify the machine.
- Stop motor/engine when adjusting or servicing this equipment.

Maintain a safe operating distance from flammable materials. Sparks from the cutting-action of this machine can ignite flammable materials or vapors.

DUST WARNING

WARNING

Some dust created by power sanding, sawing, grinding, drilling, and other construction activities contains chemicals known to cause cancer, birth defects, or other reproductive harm. Some examples of these chemicals are:

- Lead from lead-based paints, and
- Crystalline silica from bricks and concrete and other masonry products.

Your risk of exposure to these chemicals varies depending on how often you do this type of work. To reduce your risk: work in a well ventilated area, use a dust control system, such as an industrial-style vacuum, and wear approved personal safety equipment, such as a dust/particle respirator designed to filter out microscopic particles.

100 Thomas Johnson Drive, Frederick, MD 21702-4600 USA
Phone (301) 663-1600 • 1-800-638-3326
Fax (301) 663-1607 • 1-800-447-3326
Website: www.edcoinc.com
Email: sales@edcoinc.com

EDCO — A Division of Equipment Development Company, Inc.
CONTRx Systems

SPECIFICATIONS

Table of Contents

Section	Page Number
Safety Instructions	2
Specifications	3
Safety Guidelines	4
Operating Instructions	5-6
Cutting	6
SMI Dust and Silica Warning	6
Maintenance	7
Limited Equipment Warranty	Back Page

Note:
All dimensions and weights are for **reference only** and subject to change at any time.

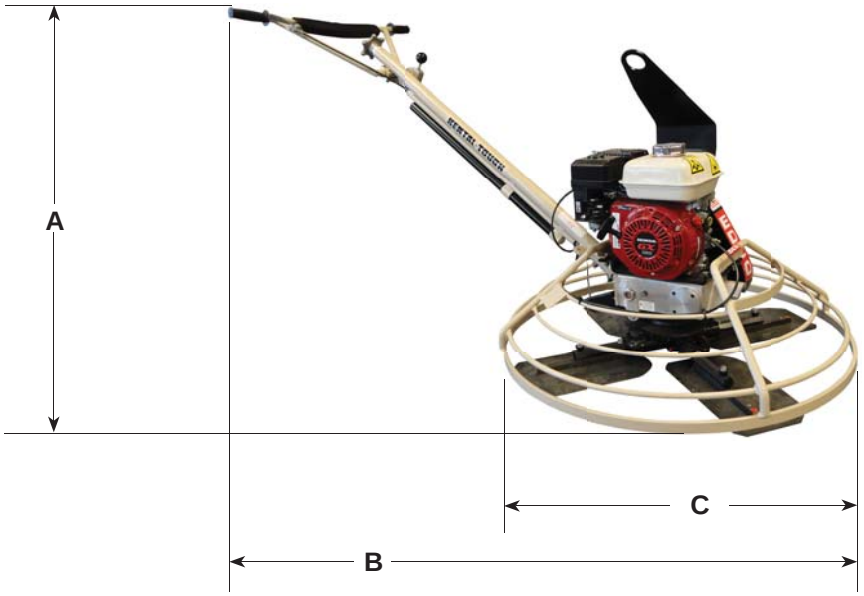

Figure 1

HOW TO ORDER REPAIR PARTS

To insure product safety and reliability, always use genuine EDCO replacement parts when making repairs to the equipment.

When ordering parts, please specify the MODEL and SERIAL NUMBER of the machine as given on the NAMEPLATE. In addition, give part number, description and quantity as listed on the parts list.

Please note: Due to improvements and changes in the equipment the illustrations shown may be different from the actual machine.

Toll Free: Phone 1-800-638-3326 • Fax 1-800-447-3326

	EDCO POWER TROWEL	
Model	436	446
"A"	36" (914mm)	39" (991mm)
"B"	72" (1828mm)	78" (1981mm)
"C"	38" (965mm)	48" (1219mm)
Weight	226 lbs. (102kg)	238 lbs. (108kg)

100 Thomas Johnson Drive, Frederick, MD 21702-4600 USA
Phone (301) 663-1600 • 1-800-638-3326
Fax (301) 663-1607 • 1-800-447-3326
Website: www.edcoinc.com
Email: sales@edcoinc.com

Printed in USA
TVW ©2011

Read and understand this *Operator's Instruction Manual*, and the *Engine Manufacturer's Owner's Manual* before operating this equipment. Death of serious injury can result if this machine is used improperly.

DANGER WARNING

Safety Guidelines

Eye and ear protection must be worn at all times while the saw is in use. During normal operation, sound pressure levels exceed 92dBA. Use only ANSI approved safety glasses to help prevent eye injury. Standard eyeglasses have only impact resistant lenses; they are NOT safety glasses.

Operator must wear appropriate clothing and footwear. Do not wear loose clothing or jewelry that can get tangled in moving parts. Footwear should provide sure footing and protection from debris that may be dropped. Take steps to insure hair will not be caught in moving parts. If necessary, tie it back.

- When loading or unloading the saw, use caution. Make sure rolling table is locked so that the blade will not be damaged. Do not move the saw while the engine is running.
- Never exceed the maximum operating speed of the blade. Match the blade speed rating with the arbor shaft speed.
- Never leave the saw running unattended.
- Never operate this saw under the influence of drugs, alcohol or when taking medications that impair the senses or reactions, or when excessively tired or under stress.
- Do not lend or rent this equipment without including the Operator's Instruction Manual and the Engine Manufacturer's Manual.
- Make sure all safety decals can be clearly read and understood. Replace damaged or missing decals immediately.

For Electric Models:

- Electric motor must be properly grounded at all times. Check the outlet box to be sure the electrical service is properly grounded and that adequate power is available. Insufficient power will cause motor to overheat and burn out. Use only grounded extension cords correctly sized for the current draw and voltage drop (amp rating and length). Never use frayed, damaged, taped or underrated extension cords. Electrical shock could result in death or serious injury and damage to the equipment.

Dry cutting creates a large volume of airborne dust. For health reasons, the operator should wear an applicable respirator. The dust may contain chemicals known to cause serious illnesses, including Silicosis - a fatal disease of the lungs. Check the chemical properties of the material to be cut and follow all EPA/OSHA regulations.

Safety warnings and guidelines do not by themselves eliminate danger.
They are not substitutes for proper accident prevention procedures and good judgement.

100 Thomas Johnson Drive, Frederick, MD 21702-4600 USA
Phone (301) 663-1600 • 1-800-638-3326
Fax (301) 663-1607 • 1-800-447-3326
Website: www.edcoinc.com
Email: sales@edcoinc.com

EDCO
A Division of Equipment Development Company, Inc.
CONTRX Systems

NOTICE

THE INFORMATION CONTAINED IN THIS MANUAL WAS BASED ON MACHINES IN PRODUCTION AT THE TIME OF PUBLICATION. EDCO RESERVES THE RIGHT TO CHANGE ANY PORTION OF THIS MANUAL WITHOUT NOTICE.

Information Contained in this Manual:

This manual provides information and procedures to safely operate and maintain the series T364 and T464.

For your own safety and protection from personal injury, carefully read, understand and observe the safety instructions described in this manual.

Always operate and maintain this machine in accordance with the instructions described in this manual. A well maintained piece of equipment will provide many years of trouble free operation.

This manual is divided into sections listed below:

1A OPERATIONS	2A ASSEMBLY	3A PARTS

Ordering Parts

This manual contains an illustrated parts list for help in ordering replacement parts for your machine. Follow the instructions listed below when ordering parts to insure prompt and accurate delivery.

1. On all orders for service parts include the SERIAL NUMBER and MODEL NUMBER of machine. Shipment will be delayed if this information is not included.

2. Include correct description and part number from parts section.

3. State exact shipping instructions including preferred routing and complete destination address.

4. **DO NOT** return parts to EDCO without first receiving written authorization from EDCO. All authorized returns must be shipped prepaid.

Keep this manual or a copy of it with the machine/ If you lose this manual or need an additional copy, please contact your EDCO distributor or EDCO at 800-638-3326 or 301-663-1600.

EDCO
A Division of Equipment Development Company, Inc.
CONTRx Systems
100 Thomas Johnson Drive, Frederick, MD 21702-4600 USA
Phone (301) 663-1600 • 1-800-638-3326
Fax (301) 663-1607 • 1-800-447-3326
Website: www.edcoinc.com
Email: sales@edcoinc.com

Printed in USA
TVW ©2011

IMPORTANT REMINDER

Fill out your EDCO warranty card and place it in the mail within 24 hours of delivery.

Complete other warranty requirements as specified by the engine manufacturer in their instructions attached to the engine.

Your engine is not manufactured by EDCO, and therefore is not covered under our warranty.

Your engine manufacturer should be contacted if you wish to purchase a parts manual or a repair manual for your engine.

Refer to the enclosed owners manual on the engine for complete Operation & Maintenance instructions.

Your Distributor

Your distributor has EDCO trained mechanics and original EDCO replacement parts. Always contact the EDCO distributor who sold you this machine for EDCO certified repairs and replacement parts.

Place distributor information here for future reference.

DISTRIBUTOR NAME:_____ **PHONE NUMBER:**_____
ADDRESS:_____
CITY:_____ **STATE:**_____ **ZIP:**_____
SALESMAN:_____
ADDITIONAL INFORMATION:_____

Printed in USA
©2011 TVW

100 Thomas Johnson Drive, Frederick, MD 21702-4600 USA
Phone (301) 663-1600 • 1-800-638-3326
Fax (301) 663-1607 • 1-800-447-3326
Website: www.edcoinc.com
Email: sales@edcoinc.com

EDCO
A Division of Equipment Development Company, Inc.
CONTRX Systems

1A OPERATIONS

Operation Information

Model T364 and T464

Table of Contents

1.1	Safety Notes	1A-5
1.2	Laws Pertaining to Spark Arrestors	1A-5
1.3	Operating Safety	1A-5
1.4	Service Safety	1A-6
1.5	Technical Data	1A-7
1.6	Dimensions	1A-8
1.7	Description	1A-9
1.8	Before Starting	1A-9
1.9	Starting	1A-9
1.10	Steering	1A-10
1.11	Pitch Adjustment	1A-10
1.12	Periodic Adjustment	1A-11
1.13	Trowel Gear Box	1A-11
1.14	Drive Belts	1A-12
1.15	Compensation for Bent Trowel Arms	1A-12
1.16	Lift Lever Adjustment	1A-13
1.17	Mounting a Float Disc	1A-13

This machine was built with user safety in mind, however, it can present hazards if improperly operated and serviced. Follow operating instructions carefully!

If you have questions about operating or servicing this equipment, please contact EDCO Customer Service at 800-638-3326 or 301-663-1600.

EDCO
A Division of Equipment Development Company, Inc.
CONTRx Systems
100 Thomas Johnson Drive, Frederick, MD 21702-4600 USA
Phone (301) 663-1600 • 1-800-638-3326
Fax (301) 663-1607 • 1-800-447-3326
Website: www.edcoinc.com
Email: sales@edcoinc.com

Printed in USA
TVW ©2011

1A OPERATIONS

1.4 Service Safety

Poorly maintained equipment can become a safety hazard! In order for the equipment to operate safely and properly over a long period of time, periodic maintenance and occasional repairs are necessary.

Warning

DO NOT attempt to clean or service machine while it is running. Rotating parts can cause servere injury.

DO NOT crank a fowled engine with the spark plug removed on gasoline-powered engines. Fuel trapped in the cylinder will squirt out of the spark plug hole.

DO NOT test for spark on gasoline-powered engines if engine is flooded or the smell of gasoline is present. A stray spark could ignite fumes.

DO NOT use gasoline or other types of fuels or flammable solvents to clean parts, especially in enclosed areas. Fumes from fuels and solvents can become explosive.

ALWAYS operate machine with all safety devices and guards in place and in working order.

ALWAYS keep area around muffler free of debris such as leaves, paper, cartons, etc. A hot muffler could ignite them, starting a fire.

ALWAYS replace worn or damaged components with spare parts designed and recommended by EDCO Engineering.

ALWAYS disconnect spark plug on machines equipped with gasoline engines before servicing to avoid accidental start up.

1.5 Technical Data
Honda Engines

Engine Make and Model		Honda 5.5 GX160	Honda 11 GX340
Rated Power	hp (kw)	5.5 (4.1)	11 (8.2)
Piston Displacement	cu. in. (cc)	9.9 (162)	21 (344)
Spark Plug	Type	BPR6ES (NKG)	SAME
Electrode Gap	in. (mm)	.029 (.75)	SAME
Operating Speed	RPM	3800	SAME
Fuel Capacity	gal. (L)	.95 (2.5)	1.6 (6.0)
Fuel Cunsumption	lb/hph (g/kwh)	.50 (310)	.51 (310)
Running Time	Hours	1.9	3.33
Centrifugal Clutch	Type	MECH RAMP	SAME
Low Oil Shutdown Alert		YES	YES
Engine Oil Capacity	US qt (L)	.63 (.6)	1.16 (1.1)
Engine Lubrication	Oil Grade	SAE 10W30	SAME
Operation Weight	lbs. (kg)	31 (15)	68 (31)

Printed in USA
©2011 TVW

100 Thomas Johnson Drive, Frederick, MD 21702-4600 USA
Phone (301) 663-1600 • 1-800-638-3326
Fax (301) 663-1607 • 1-800-447-3326
Website: www.edcoinc.com
Email: sales@edcoinc.com

EDCO
A Division of Equipment Development Company, Inc.
CONTRx Systems

1.7 Description

1A OPERATIONS

The ***POWER TROWEL*** is a modern high production machine. Finishing rate will vary depending on operator skill and job conditions. The trowel has four finishing blades. The standard duty gearbox is designed to provide exceptional performance low maintenance and trouble free use under the worst conditions. All ***POWER TROWELS*** are equipped with a safety shutdown switch and a low oil shutdown alert for added job safety and enging protection. Operation time between fuel refills is approximately 2-1/2 to 3 hours with rotor speeds between 80 and 120 rpm. ***POWER TROWELS*** are the most technically advanced trowels on the market today. With proper maintenance and use your trowel will provide you with exceptional service.

1.8 Before Starting

Before Starting trowel check the following:

*Oil level in engine
*Oil level in trowel gear box
*Fuel level
*Condition of air filter
*Condition of trowel arms and blades

1.8 Before Starting

Before starting the operator must know the location of all controls.

Move the **choke lever** to the closed position to start the engine. The choke may not be needed if the engine is warm or the air temperature is hot. In this case keep the choke lever open. Pull **crank wheel pull handle** until the engine starts.

EDCO A Division of Equipment Development Company, Inc.
CONTRxSystems
100 Thomas Johnson Drive, Frederick, MD 21702-4600 USA
Phone (301) 663-1600 • 1-800-638-3326
Fax (301) 663-1607 • 1-800-447-3326
Website: www.edcoinc.com
Email: sales@edcoinc.com

Printed in USA
TVW ©2011

1.10 Steering

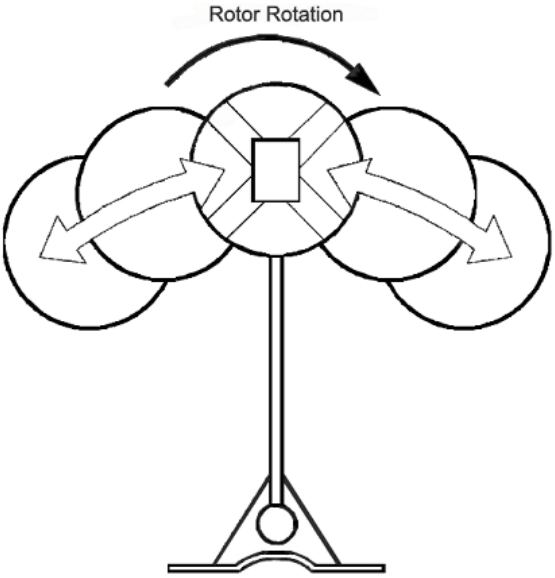

Push down on the handle to move the rotor assembly to the right.

Pull up on the handle assembly to move the rotor assembly to the left.

1.11 Pitch Adjustment

When changing or setting the pitch of the machine be sure that the machine is at a complete stop. On machines equipped with standard pitch, turn the pitch control knob clockwise to increase the pitch and turn it counter-clockwise to decrease the pitch. On machines equipped with positive pitch pull the pitch control handle up to increase the pitch and push the handle down to decrease the pitch.

1.12 Periodic Maintenance Schedule

The chart below lists basic engine maintenance. Refer to engine manufacturer's Operation Manual for additional information on engine maintenance. A copy of the engine Operator's Manual was supplied with the machine when it was shipped.

	DAILY	EVERY 50 HOURS	EVERY 100 HOURS	EVERY 300 HOURS
GREASE TROWEL ARMS	√			
CHECK OIL LEVEL IN GEARBOX	√			
CHECK FUEL FILTER	√			
INSPECT AIR FILTERS - REPLACE AS NEEDED	√			
CHECK AND TIGHTEN EXTERNAL HARDWARE	√			
CHECK AND ADJUST DRIVE BELTS		√		
CHANGE ENGINE OIL			√	
REPLACE FUEL FILTER				√
REPLACE SPARK PLUG				√

1.13 Trowel Gearbox

Check gearbox sight glass for correct oil level daily (every 8 hours). Add oil if oil level is below the bottom third of the sight glass. The gearbox oil level should only be checked when the gearbox is in the level position. To add oil, tilt trowel back and remove sight glass. Add oil through sight glass opening. Replace sight glass and check oil level. Do **NOT** fill past the 3/4 full point. Use only Mobil oil SHC 634, ISO Grade 460, Medium SAE 140 weight.

Printed in USA
©2011 TVW
Page 10
100 Thomas Johnson Drive, Frederick, MD 21702-4600 USA
Phone (301) 663-1600 • 1-800-638-3326
Fax (301) 663-1607 • 1-800-447-3326
Website: www.edcoinc.com
Email: sales@edcoinc.com
EDCO
A Division of Equipment Development Company, Inc.
CONTRx Systems

1A OPERATIONS

1.14 Drive Belts

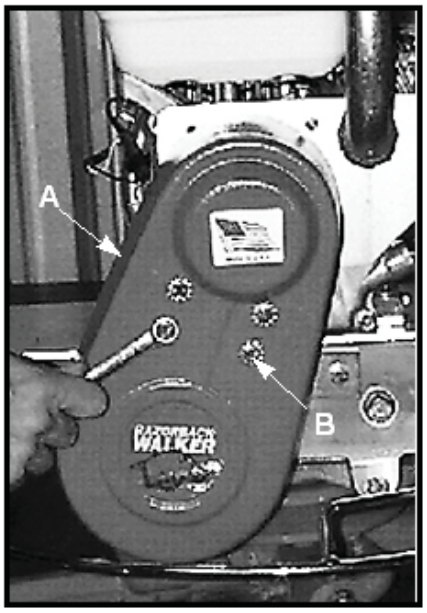

Figure 1

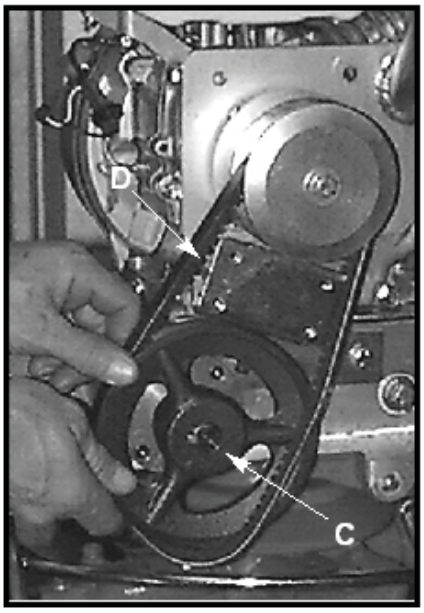

Figure 2

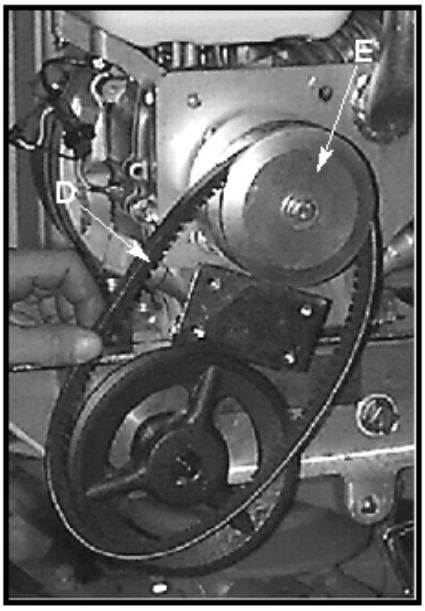

Figure 3

To Replace Belts:

1. Remove belt guard (A) by removing the four belt guard mounting bolts (B). See Figure 1.
2. Rotate the pulley (C) while pulling the bottom of the belt (D) out. See Figure 2.
3. After the belt (D) has cleared the pulley, remove it from clutch (E). See Figure 3.
4. Repeat steps 1 through 3 in reverse order to install new belt.

NOTE: When replacing the belt be sure that the pulley and the clutch are in perfect alignment. If the belt is allowed to lean to the left or right it will cause the clutch to engage prematurely on start-up.

1.15 Compensating for Bent Trowel Arms

1. Loosen nut (B) slightly.
2. Adjust bolt (A) until trowel blade is level.
3. Tighten nut.
   (See figure 4)

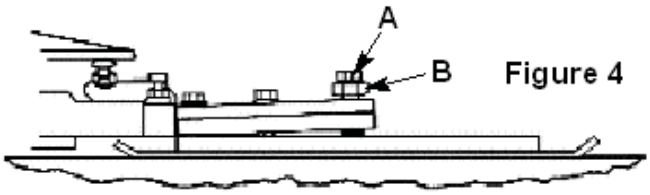

Figure 4

EDCO
A Division of Equipment Development Company, Inc.
CONTRxSystems
100 Thomas Johnson Drive, Frederick, MD 21702-4600 USA
Phone (301) 663-1600 • 1-800-638-3326
Fax (301) 663-1607 • 1-800-447-3326
Website: www.edcoinc.com
Email: sales@edcoinc.com

Printed in USA
TVW ©2011

1.16 Lift Lever Adjustment

Damage to, or replacement of, a trowel arm can change the adjustment of the lift lever. This can unbalance the trowel arms and cause the trowel to wobble during operation. To operate smoothly, the lift lever on all arms must be adjusted equally. All arms should be adjusted at the same time to ensure that the trowel is balanced correctly. Adjust trowel arms using optional adjusting tool as described below.

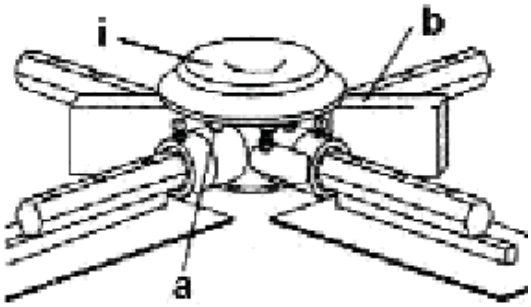

1. Block up pressure plate using wooden blocks (b) and have blades without contact.
2. Loosen hex head screws (a) on spider which secures trowel arm in place (do not remove screws).
3. Remove trowel arms from spider with lift levers in place
4. Remove blade from trowel arms.
5. Clean all flats on trowel arm before placing it in the adjusting tool (c) to make sure it lies flat. Clean thoroughly using a wire brush and scraper.
6. The adjusting tool comes with three different size spacers. Use the shortest spacer (d) when adjusting the T364 and T464. Use the medium spacer when adjusting the T464SD.
7. Insert trowel arm into adjusting tool as shown.
8. Tighten socket head bolts (e) down on the trowel arm to hold it in place.
9. Move adjusting tool arm (f) over carriage bolts (g) on lift levers shown.
10. Loosen the jam nut (h) and adjust the carriage bolt so that the top of the bolt is just touching and making contact with the bottom of the adjusting tool.
11. Tighten jam nut to secure adjustment in place.
12. Attach blades to arms and trowel arms to spider plate. Tighten hex head screws to secure arm in spider.

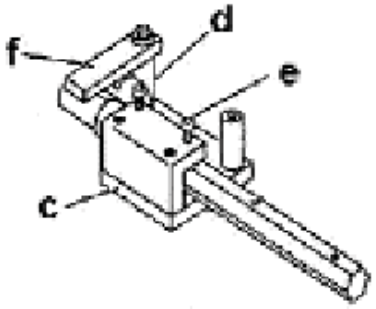

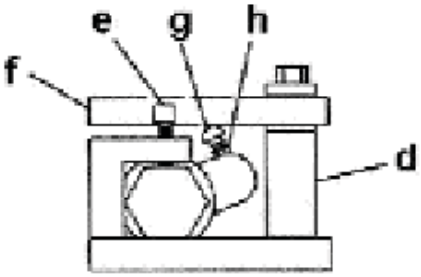

1.17 Mount Floating Disc

Certain applications may require the use of a floating disc. To mount disc (a), lift trowel off the ground (engine off) and position disc against blades. Turn disc either to the right or the left to engage clip angles (b) as shown. Remember the right hand trowel blades turn counter-clockwise the left-hand blades turn clockwise.

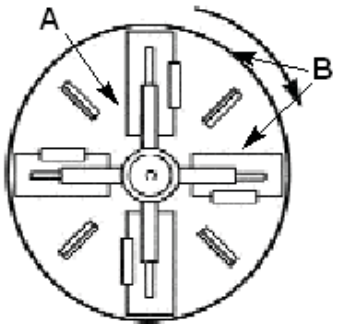

Printed in USA
©2011 TVW

100 Thomas Johnson Drive, Frederick, MD 21702-4600 USA
Phone (301) 663-1600 • 1-800-638-3326
Fax (301) 663-1607 • 1-800-447-3326
Website: www.edcoinc.com
Email: sales@edcoinc.com

EDCO
A Division of Equipment Development Company, Inc.
CONTRx Systems

2A ASSEMBLY

ASSEMBLY INSTRUCTIONS

STEP 1: Un-pack the handle assembly (A) and the lower unit from their boxes. Check to make sure no damage was done during shipment. Mount the handle assembly (A) to the gearbox (B) on the lower unit using 4 3/8" nylock nuts (C) that are supplied in a package in the lower unit.

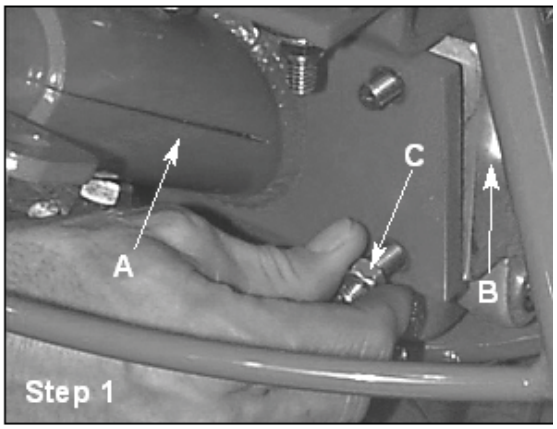

STEP 2: With the handle mounted to the lower unit, attach the pitch control cable (A) through the yoke arm (B) using the remaining 3/8" nylock nut (C). Tighten the nylock nut to where there is approximately a 1/4" of the threads are showing.

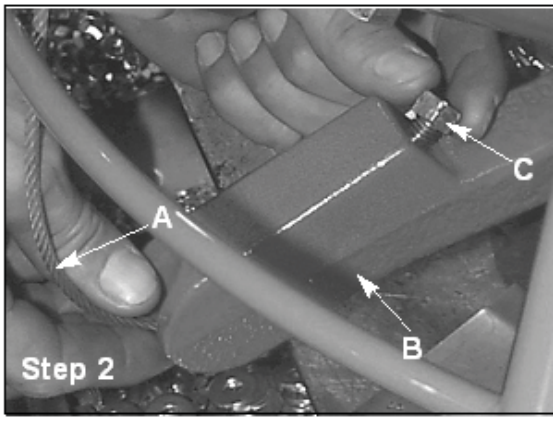

STEP 3: Attach the kill wire (A) that is coming from the handle assembly to the engine using the wire splicer (B) that is supplied on the lower unit.

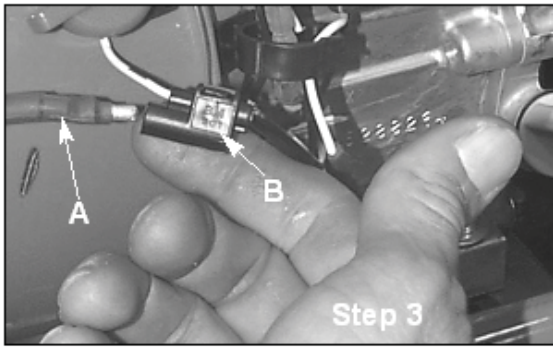

STEP 4: Make sure that the throttle lever on the handle assembly is pushed all the way forward. Remove the breather cap and the breather from the engine. Unscrew the cable adjustment clasp (A). Next make sure that the throttle lever (B) on the engine is pushed all the way forward . Insert the wire coming out of the cable into the hole (C) shown on the diagram. With everything in place, put the cable adjustment clasp (A) back on and tighten down snug.

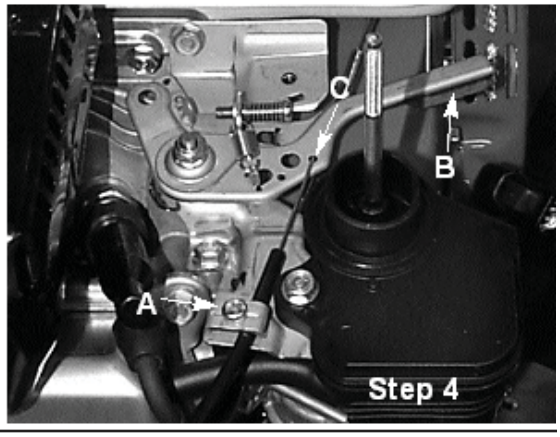

EDCO
A Division of Equipment Development Company, Inc.
CONTRxSystems
100 Thomas Johnson Drive, Frederick, MD 21702-4600 USA
Phone (301) 663-1600 • 1-800-638-3326
Fax (301) 663-1607 • 1-800-447-3326
Website: www.edcoinc.com
Email: sales@edcoinc.com

Printed in USA
TVW ©2011

Parts Information

3A OPERATIONS

INFORMATION.....PAGE(S)
Lower End Assembly.....3A-2 & 3
Handle Assembly.....3A-4
Pitch Control Assembly.....3A-5
Standard Gearbox Assembly.....3A-6 & 7
Standard Fan Cooled Gearbox Assembly.....3A-8 & 9
Kill Switch Assembly..... .....3A-10
Speed Kits (Low & High).....3A-11
Optional Accessories.....3A-12

NOTES:

Printed in USA
©2011 TVW

100 Thomas Johnson Drive, Frederick, MD 21702-4600 USA
Phone (301) 663-1600 • 1-800-638-3326
Fax (301) 663-1607 • 1-800-447-3326
Website: www.edcoinc.com
Email: sales@edcoinc.com

EDCO
A Division of Equipment Development Company, Inc.

CONTRX Systems

3A PARTS

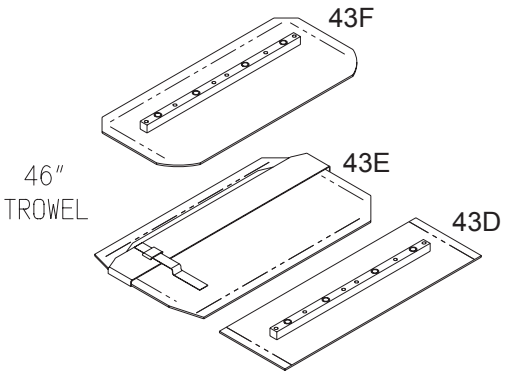

43 SERIES BLADES

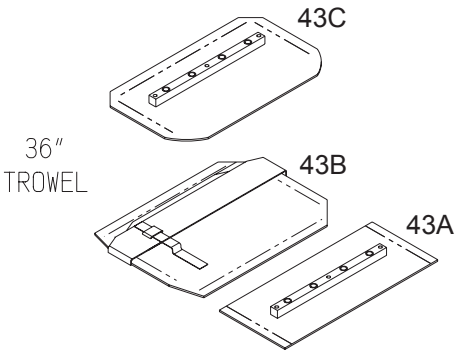

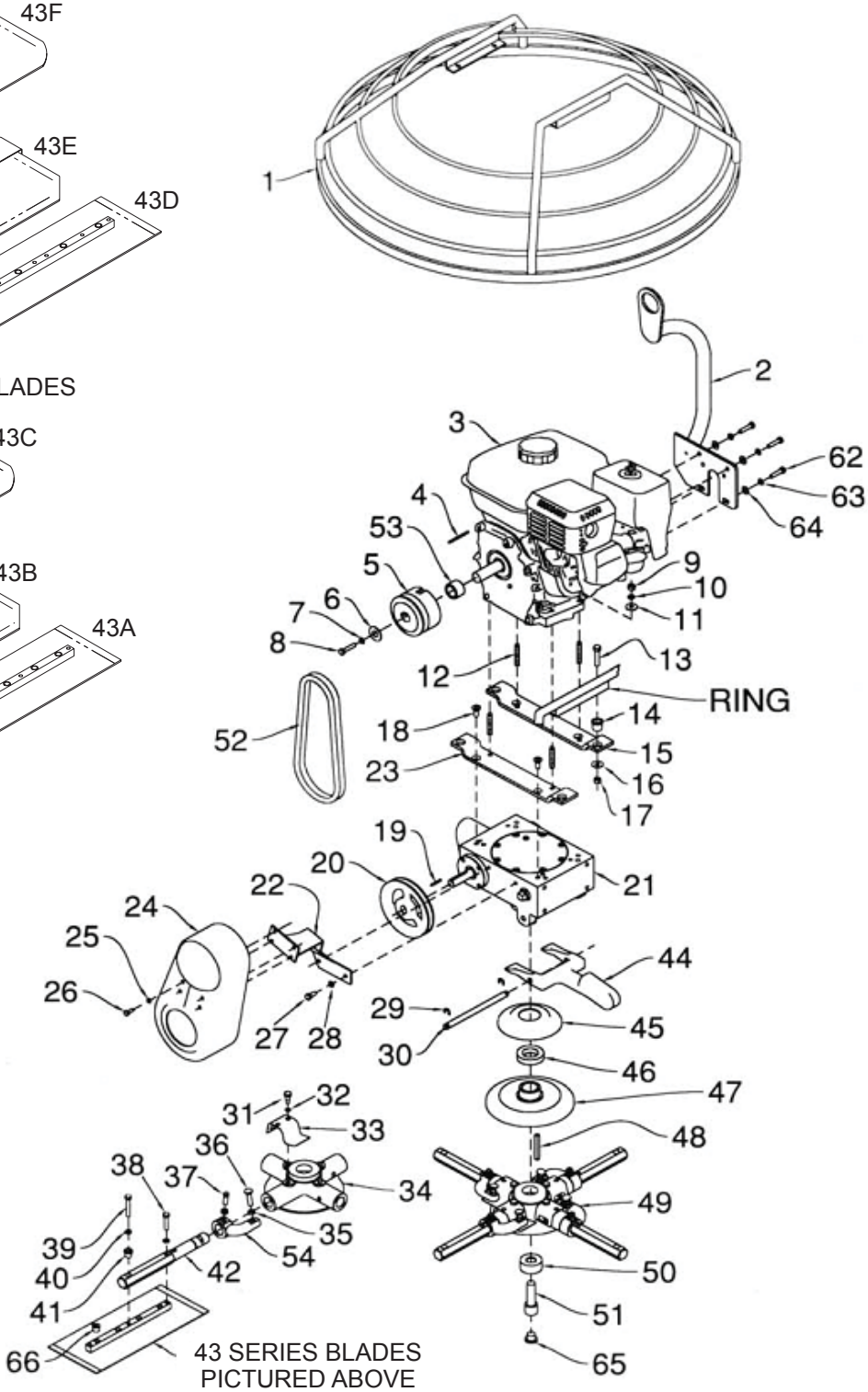

43 SERIES BLADES
PICTURED ABOVE

EDCO
A Division of Equipment Development Company, Inc.
CONTRxSystems
100 Thomas Johnson Drive, Frederick, MD 21702-4600 USA
Phone (301) 663-1600 • 1-800-638-3326
Fax (301) 663-1607 • 1-800-447-3326
Website: www.edcoinc.com
Email: sales@edcoinc.com

Printed in USA
TVW ©2011

LOWER END ASSEMBLY (cont'd)

ILL.	PART#	DESCRIPTION	QTY
1	037619	RING, T364.	1
	037626	RING, T464.	1
2	221480	LIFTING HOOK	1
3	018961	ENGINE, 5.5 HO	1
	033395	ENGINE, 5.5 KA	1
	018957	ENGINE, 11 HO	1
	033397	ENGINE, 11 KA	1
4		KEY SUPPLIED WITH ENGINE.	1
5	016604	CLUTCH, 3/4"	1
	015701	CLUTCH 1"	1
6	010083	FLAT WASHER	1
7	010090	LOCK WASHER	1
8	022553	BOLT	1
9	010100	NUT	4
10	010090	LOCK WASHER	4
11	010082	FLAT WASHER	4
12	018012	STUD	4
13	010039	BOLT	4
14	037648	RUBBER BUSHING	4
15	037665	MTR MNT RH 11 HP	1
	037656	MTR MNT RH 5 HP	1
16	037675	FLAT WASHER	4
17	010464	NUT	4
18	015711	SCREW	4
19	010273	KEY, 3/16 X 2	1
20	015707	PULLEY	1
20a	012784	PULLEY (used on 040973 & 040974)	1
21	015202	GEARBOX	1
	040969	SFC GEARBOX	1
22	020977	GUARD BRACKET	1
23	037661	MTR MNT LH11 HP	1
	037659	MTR MNT LH 5 HP	1
24	015987	SMALL GUARD	1
	015703	LARGE GUARD	1
25	012753	STAR WASHER	4
26	010002	BOLT	2
27	010019	BOLT	2
28	010090	LOCK WASHER	2
29	015677	E-CLIP	2
30	015678	YOKE ARM PIN	1
31	015683	BOLT	4
32	015682	STAR WASHER	4
33	016920	TROWEL ARM CLIP	4
34	015816	4-BOSS	1
35	015684	NUT	8
36	012990	BOLT	4
37	015686	BOLT	4
38	010022	BOLT	4
39	010024	BOLT	4

ILL.	PART#	DESCRIPTION	QTY
40	010090	LOCK WASHER	8
41	015688	INSERT	4
42	015818	T364 TROWEL ARM	4
	024794	T464 " "	4
43A.	40050-C	F-1C FINISH TROWEL BLADE 6x14	4
43B.	40060-C	M-1C FLOAT TROWEL BLADE 10x14 (SLIPS OVER FINISH BLADE)	4
43C.	40040-C	C-1C COMBINATION TROWEL BLADE 8x14	4
43D.	40080-C	F-3C FINISH TROWEL BLADE 6x18	4
43E.	40090-C	M-3C FLOAT TROWEL BLADE 10x18	4
43F.	40070-C	C-3C COMBINATION TROWEL BLADE 8x18.	4
44	017264	YOKE ARM	1
45	015821	PRESSURE CAP	1
46	015822	THRUST BEARING	1
47	015824	PRESSURE PLATE	1
48	015696	KEY, 1/4 X 1-1/4	1
49	015893	T364 SPIDER ASS'Y.	1
	024812	T464 " "	1
50	015690	WASHER	1
51	015691	BOLT	1
52	041325	BELT, T364, T464.	1
52a.	041353	11/13 LO SPEED	1
53	036665	SPACER	1
	039407	SPACER	1
54	033032	LIFT LEVER	4
	033034	LIFT LEVER	4
55	039203	UPPER RING (T364)	1
56	037265	WHEEL HOUSING	4
57	037422	RETAINING SPACER.	4
58	037269	PIN	4
59	037267	BEARING	8
60	039204	LOWER RING (T364).	1
61.	039211	URETHANE BELT (T364)111"	1
62	012974	5/16-24 X 3/4 BOLT	4
63	010090	LOCK WASHER	2
64	010082	FLAT WASHER	2
65	015693	PLUG	1
66	015694	PLUG	4
	015694	PLUG -- (T464)	12
67	041681	COVER, LH (T364)	2
68	041683	COVER, RH (T364).	2
69	040860	BRACKET	4
70	020542	NUT, 1/4" STOVER	16
71	015805	STAB. RING (T464).	1

Printed in USA
©2011 TVW

100 Thomas Johnson Drive, Frederick, MD 21702-4600 USA
Phone (301) 663-1600 • 1-800-638-3326
Fax (301) 663-1607 • 1-800-447-3326
Website: www.edcoinc.com
Email: sales@edcoinc.com

EDCO
A Division of Equipment Development Company, Inc.
CONTRX Systems

3A PARTS

HANDLE ASSEMBLY

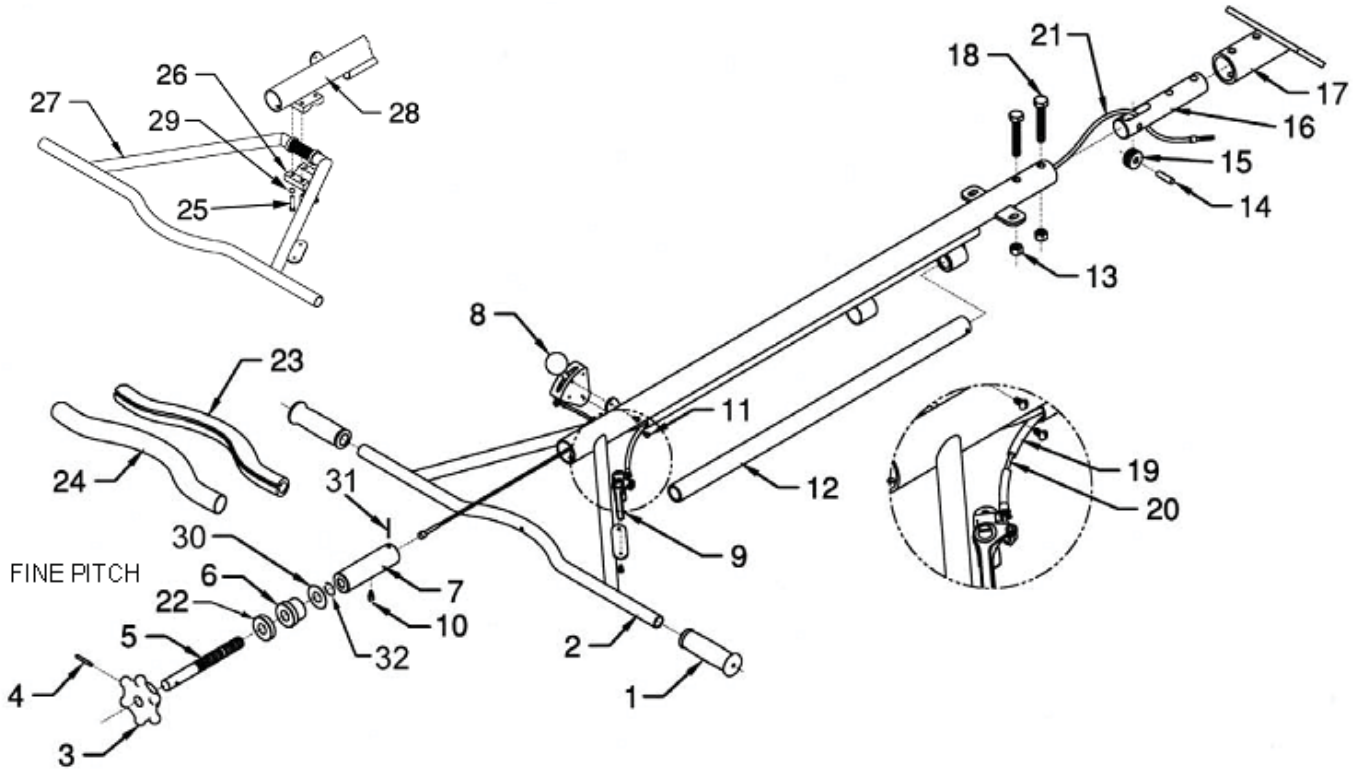

ILL.	PART#	DESCRIPTION	QTY
1	037668	GRIP	2
2	015724	HNDLASSY FINE PITCH LG.	1
	015725	HNDLASSY FINE PITCH ST	1
	028012	HNDLASSY POS PITCH LG	1
	034449	HNDLASSY POS PITCH ST	1
	020498	HNDL ST WELD'T F/PT	1
	020499	HNDL LG WELD'T F/PT	1
3	015739	KNOB. ADJ. HANDLE	1
4	015740	PIN, SPIRAL 3/16 X 1-3/4	1
5	015741	SCREW, SHAFT	1
6	015743	BUSHING	1
7	015746	BUSHING, SLIDE	1
8	018409	SWITCH, SAFETY ASSY	1
9	015736	LEVER, THROTTLE	1
10	015410	SET SCREW 1/4-20 X 3/8	1
11	013370	SCREW, 10-32 X 3/8	2
12	015769	BAR, CARRY	1
13	011238	NUT, NYLOCK 1/2-13	2
14	015754	PIN, 3/8 X 1-3/8	1
15	015753	PULLEY CABLE	1
16	015752	BLOCK, CABLE SUPPORT	1
17	034714	BRKT, MTG. F/SHT HNDL	1
	034201	BRKT, MTG. F/LNG HNDL	1
18	010075	FSTN, 1/2-13 X 3 GR. 5	2
19	015735	THROTTLE CABLE ASSY	1

ILL.	PART#	DESCRIPTION	QTY
21	016691	CABLE, FINE SHORT	1
	015748	CABLE, FINE LONG	1
21A	027952	CABLE LEVER PITCH ASSY	1
21B	028013	CABLE 44.25" POSITIVE PITCH SHORT HANDLE	1
22	015742	BEARING	1
23	034441	INSULATION F/HANDLE	1
24	034440	COVER, F/ HANDLE BAR	1
25	010004	FSTN. 1/4-20 X 1-1/4	4
26	034279	BLOCK, ADJ HANDLE	1
27	034282	HANDLE, ADJUSTABLE	1
28	034283	HNDL FINE PITCHADJ (LG)	1
	034284	HNDL FINE PITCHADJ (SH)	1
	034450	HNDL POS PITCHADJ (LG)	1
	034451	HNDL POS PITCHADJ (SH)	1
29	010089	FSTN 1/4 LW	4
30	015744	WASHER	1
31	015747	ROLL PIN	1
32	015745	RING, RETAINING	1
33	034285	EXT. F/ LONG HANDLE	1
	034286	EXT. F/ SHORT HANDLE	1

EDCO
A Division of Equipment Development Company, Inc.
CONTRxSystems
100 Thomas Johnson Drive, Frederick, MD 21702-4600 USA
Phone (301) 663-1600 • 1-800-638-3326
Fax (301) 663-1607 • 1-800-447-3326
Website: www.edcoinc.com
Email: sales@edcoinc.com

Printed in USA
TVW ©2011

PITCH CONTROL ASSEMBLY

3A PARTS

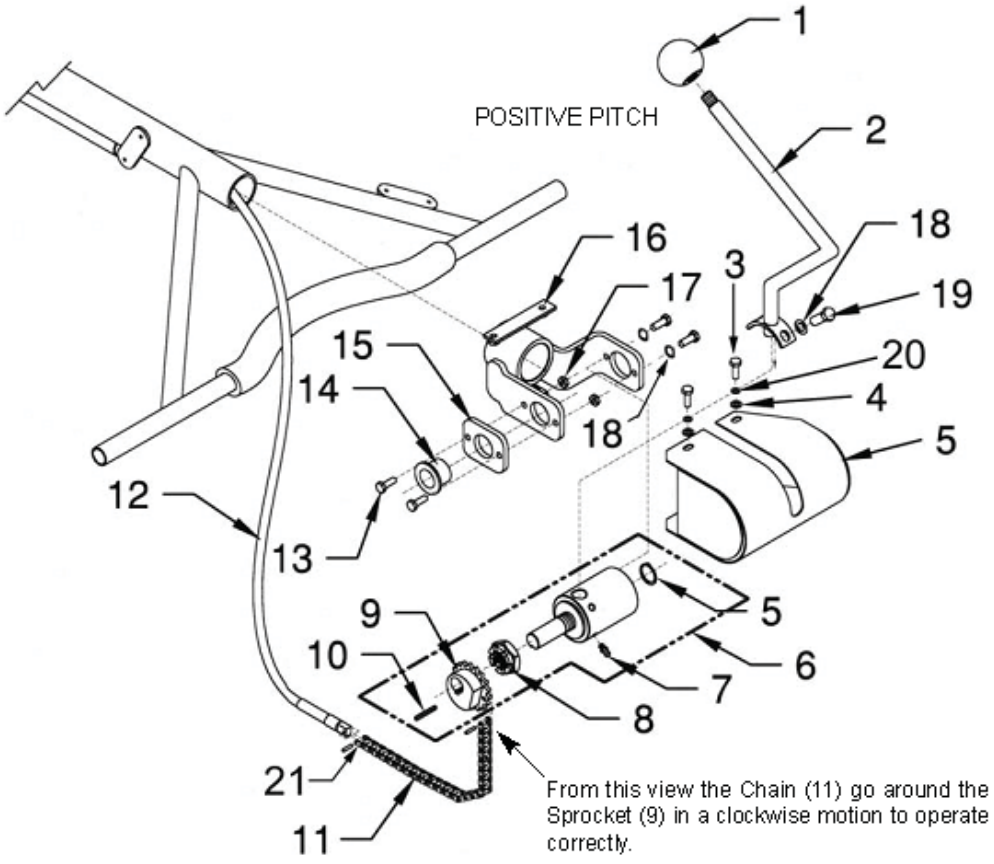

ILL.	PART#	DESCRIPTION	QTY
1	019247	KNOB, BURLOP PLASTIC 1-7/8	1
2	036448	HANDLE, POSITIVE PITCH	1
3	010002	BOLT, 1/4-20 x 3/4	3
4	010081	FLAT WASHER, 1/4	3
5	027963	COVER, WELD'T LEVER PITCH.	1
6	027958	CLUTCH, POS PITCH ASSY	1
7	018510	GREASE FITTING 1/4-28 x 45º	1
8	032346	NUT, 3/8 FLEX LOCK PLAIN	1
9	027946	SPROCKET, LEVER PITCH	1
10	015813	KEY, 3/16 x 1	1
11	028033	CHAIN, #35 R/V	3.25 in
12	028013	CABLE, POS PITCH CONTROL (SHORT)	1
	027952	CABLE, POS PITCH CONTROL (LONG)	1
13	010019	BOLT, 5/16-18 x 3/4 GR. 5	2
14	024630	BUSHING, FLANGE	1
15	027948	BUSHING, SUPPORT BRACKET	1
16	027961	BRKT. LEVER PITCH CLUTCH	1
17	010100	NUT, HEX 5/16-18	2
18	010090	LOCKWASHER, 5/16	4
19	010018	BOLT, 5/16-18 x 1/2 GR. 5	2
20	010081	FSTN, 1/4 LW	3
21	028035	LINK, MASTER (BOTH ENDS)	2

Printed in USA
©2011 TVW

100 Thomas Johnson Drive, Frederick, MD 21702-4600 USA
Phone (301) 663-1600 • 1-800-638-3326
Fax (301) 663-1607 • 1-800-447-3326
Website: www.edcoinc.com
Email: sales@edcoinc.com

EDCO
A Division of Equipment Development Company, Inc.
CONTRX Systems

3A PARTS

GEARBOX ASSEMBLY

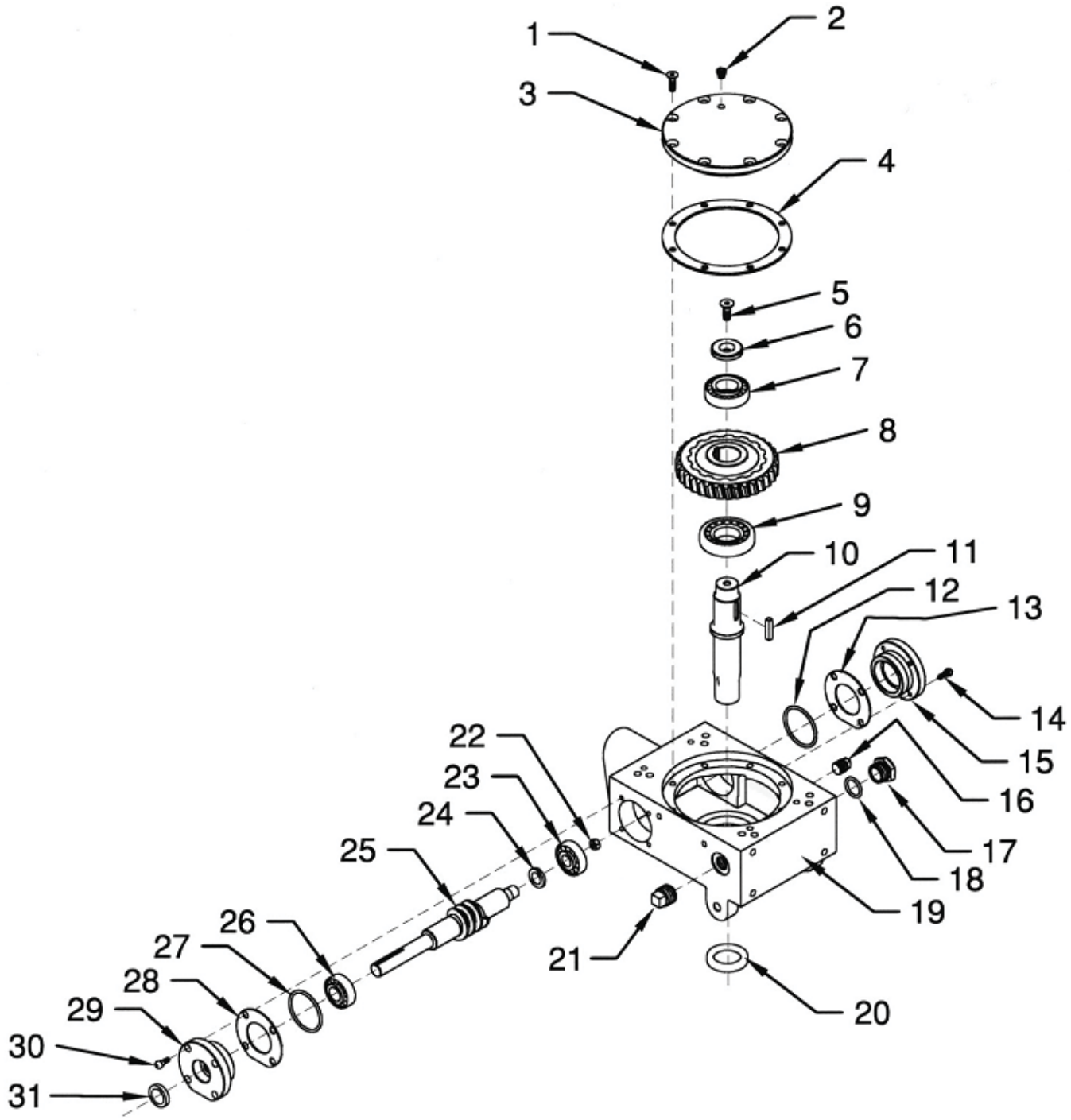

EDCO
A Division of Equipment Development Company, Inc.
CONTRxSystems
100 Thomas Johnson Drive, Frederick, MD 21702-4600 USA
Phone (301) 663-1600 • 1-800-638-3326
Fax (301) 663-1607 • 1-800-447-3326
Website: www.edcoinc.com
Email: sales@edcoinc.com

Printed in USA
TVW ©2011

GEARBOX ASSEMBLY (cont'd)

ILL.	PART#	DESCRIPTION	QTY
1	015205	SCREW, 5/16-18 x 1	8
2	015209	VALVE, 1/8 NPT-27 RELIEF	1
3	015208	COVER, GEARBOX MACHINED	1
4	032772	SHIM, (.002)	AS REQ.
	020018	SHIM, (.003)	AS REQ.
	015210	SHIM, (.005)	AS REQ.
5	015212	SCREW, 3/8-16 x 1 (LH)	1
6	015213	WASHER, PRESSURE	1
7	022073	BEARING, TAPERED ROLLER	1
	022074	BEARING RACE	1
8	015216	GEAR, BRONZE (RH)	1
9	015217	BEARING, RADIAL BALL	1
10	015219	SHAFT, MAIN MACH. FINISHED	1
11	015696	KEY, 1/4 x 1-1/4 HARDENED	1
12	015660	O-RING, GEARBOX END CAPS	1
13	015222	SHIM, (.005)	AS REQ.
	015186	SHIM, (.003)	AS REQ.
14	017314	BOLT, 1/4-20 x 5/8	4
15	015221	CAP, GEARBOX END (4-HOLE)	1
16	010498	PLUG,3/8 NPT BI SQUARE HD PIPE	1
17	015672	SIGHTGLASS, 3/4-14 NPT	1
18	015673	O-RING	1
19	015204	GEARBOX, MACHINE FINISHED	1
20	015671	SEAL, OIL CR# 13650	1
21	012953	PLUG, 3/4 NPT BI SQUARE HD PIPE	1
22	015662	NUT, JAM LH 5/8-18	1
23	015663	BEARING, ANGULAR CONTACT	1
24	022025	SPACER, FIBER GEARBOX COUNTERS	1
25	026740	SHAFT, INPUT RH GEARBOX	1
26	015668	BEARING, TAPERED ROLLER	1
	015669	BEARING RACE	1
27	015660	O-RING, GEARBOX ENDCAPS	1
28	015222	SHIM, (.005)	AS REQ.
	015186	SHIM, (.003)	AS REQ.
29	015223	FLANGE, GEARBOX (4-HOLE)	1
30	017314	BOLT, 1/4-20 x 5/8	4
31	015670	SEAL, OIL SEAL CR# 7443	1

Note: Items 4, 13 and 28 from above are sold only a kit. *SHIM SET - 029457* This kit consists of (2) 015210, (2) 015222, (2) 020018, and (2) 022186.

Printed in USA
©2011 TVW

100 Thomas Johnson Drive, Frederick, MD 21702-4600 USA
Phone (301) 663-1600 • 1-800-638-3326
Fax (301) 663-1607 • 1-800-447-3326
Website: www.edcoinc.com
Email: sales@edcoinc.com

EDCO
A Division of Equipment Development Company, Inc.
CONTRX Systems

3A PARTS

SFC GEARBOX ASSEMBLY

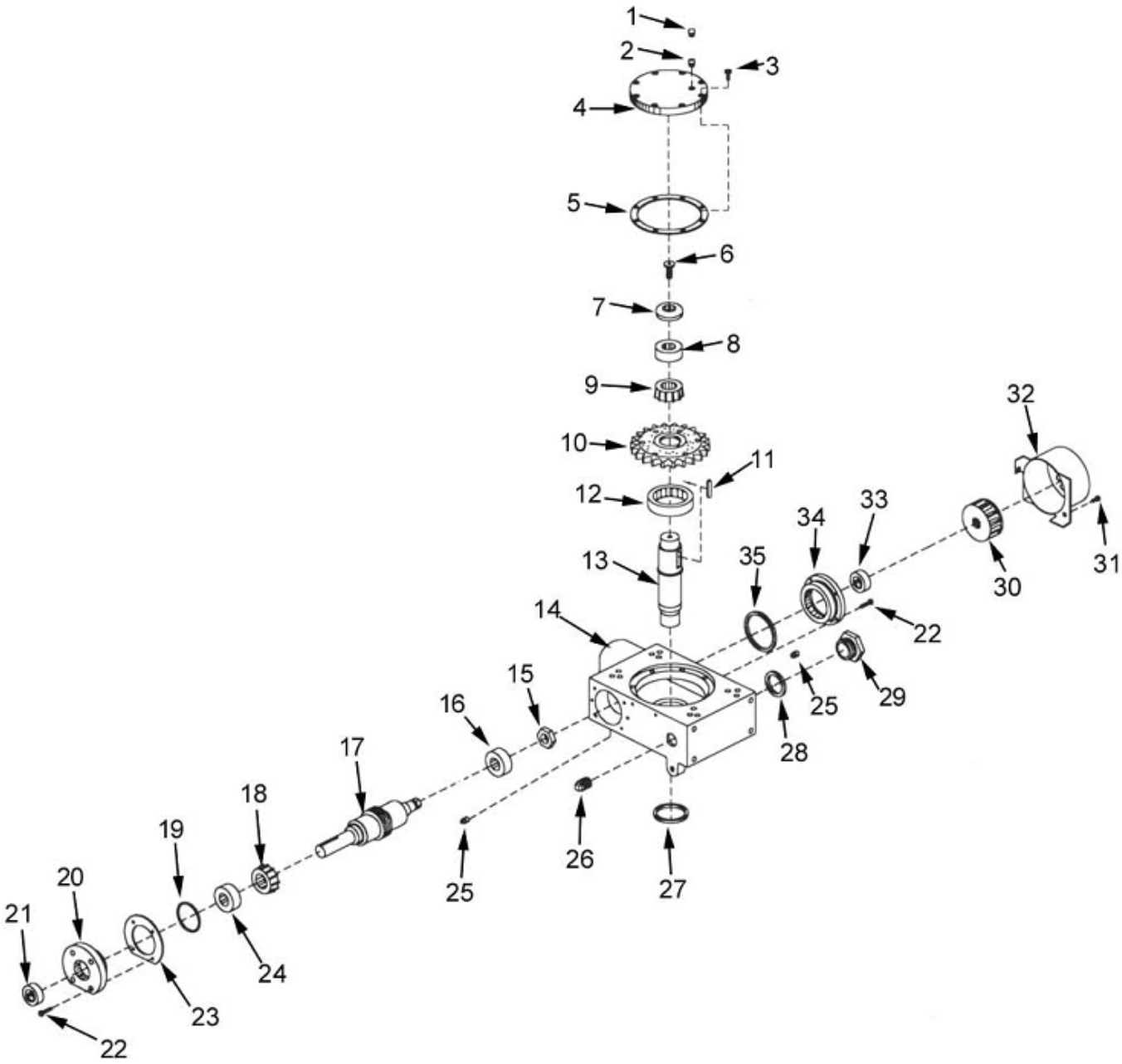

EDCO
A Division of Equipment Development Company, Inc.
CONTRx Systems
100 Thomas Johnson Drive, Frederick, MD 21702-4600 USA
Phone (301) 663-1600 • 1-800-638-3326
Fax (301) 663-1607 • 1-800-447-3326
Website: www.edcoinc.com
Email: sales@edcoinc.com

Printed in USA
TVW ©2011

SFC GEARBOX ASSEMBLY (cont'd)

ILL.	PART#	DESCRIPTION	QTY
1	032745	PLUG, PLASTIC 1/8-27	1
2	015209	VALVE, 1/8 NPT-27 RELIEF	1
3	015205	FSTN, FHSSS 3/8-16 x 1	8
4	015208	COVER, GEARBOX	1
5	032772	GASKET, .002	AS REQ.
	020018	GASKET, .003	AS REQ.
	015210	GASKET, .005	AS REQ.
6	015212	FSTN, FHSSS 3/8-16 x 1 LH	1
7	015213	PRESSURE WASHER	1
8	022074	BEARING, RACE	1
9	022073	BEARING, TAPERED ROLLER	1
10	015216	GEAR, BRONZE RH	1
11	015696	KEY, 1/4 x 1-1/4 HARDENED	1
12	015217	BEARING, RADIAL BALL	1
13	015219	SHAFT, MAIN DRIVE	1
14	015204	GEAR BOX MACHINE FINISH	1
15	015662	FSTN,NUT HEX JAM LH 5/8-18	1
16	015663	BEARING, ANGULAR CONTACT	1
17	035593	SHAFT, INPUT RH	1
18	015668	BEARING, TAPERED ROLLER	1
19	015660	O-RING, END CAP	1
20	015223	CAP, GEARBOX FLANGE (4-HOLE)	1
21	015670	SEAL, OIL CR# 7443	1
22	017314	FSTN, SCHS 1/4-20 x 5/8	8
23	022185	GASKET, .002	AS REQ.
	022186	GASKET, .003	AS REQ.
	015222	GASKET, .005	AS REQ.
24	015669	BEARING, RACE	1
25	010498	PLUG, 3/8 NPT BI SQ HD PIPE	2
26	012953	PLUG, 3/4 NPT BI SQ HD PIPE	1
27	015671	SEAL, OIL CR# 13650	1
28	015673	O-RING	1
29	015672	SIGHTGLASS, 3/4-14 NPT	1
30	035592	FAN, CW ROTATION	1
31	037484	FSTN, SCREW 10-32 x 3/8	2
32	035633L	SHROUD, FAN	1
33	035315	SEAL, OIL	1
34	035590	FLANGE, GEARBOX FAN SIDE	1
35	015660	O-RING, END CAP	1

Printed in USA
©2011 TVW
Page 22
100 Thomas Johnson Drive, Frederick, MD 21702-4600 USA
Phone (301) 663-1600 • 1-800-638-3326
Fax (301) 663-1607 • 1-800-447-3326
Website: www.edcoinc.com
Email: sales@edcoinc.com
EDCO
A Division of Equipment Development Company, Inc.
CONTRX Systems

3A PARTS

KILL SWITCH ASSEMBLY

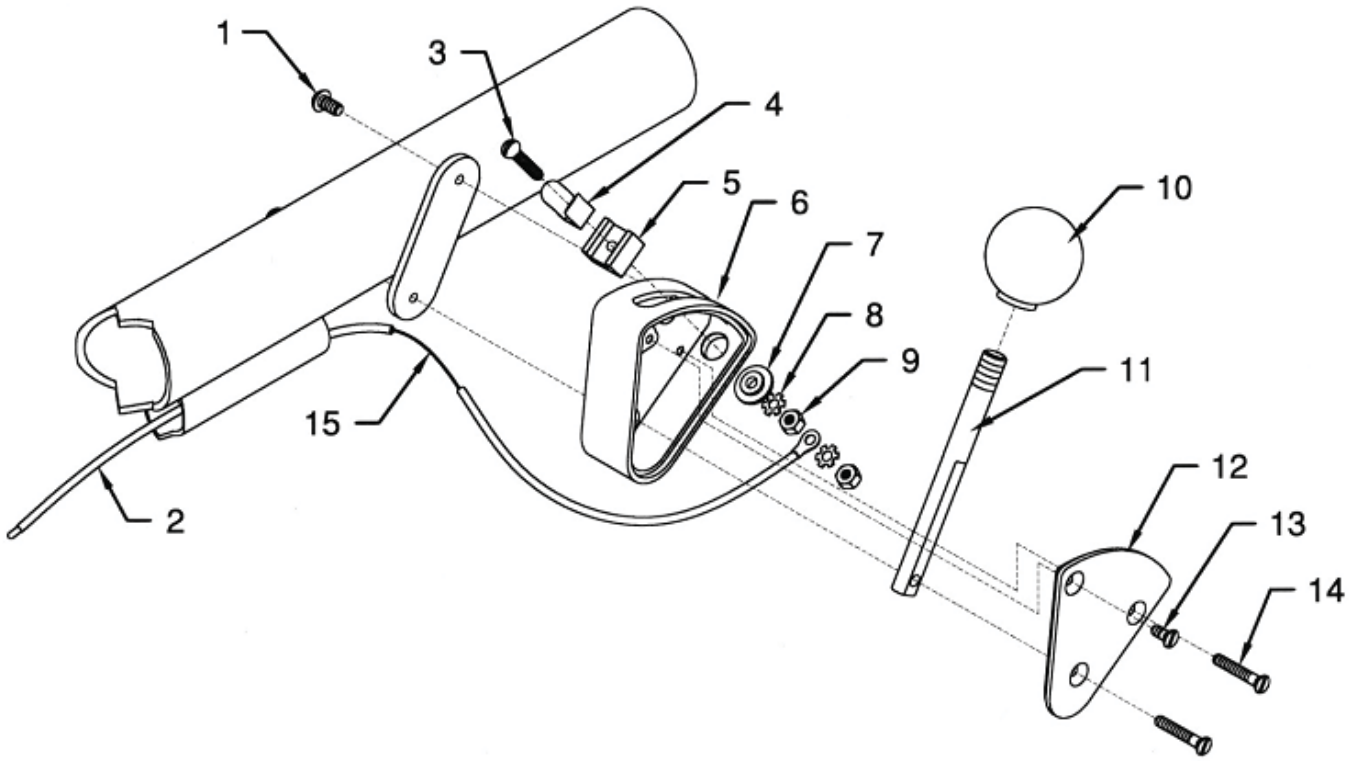

ILL.	PART#	DESCRIPTION	QTY
1	013370	SCREW, 10-32 x 3/8 SLOTTED	2
2	018512	CONDUIT, RD PVC 1/4" SMOOTH.	6.6 ft.
3	018624	SCREW, SLT 8-32 x 1	1
4	018267	CLIP, CONTACT PT SAFETY SWITCH	1
5	018407	BLOCK, CONTACT F? PT SAFETY SWITCH	1
6	018324	HOUSING, SAFETY SWITCH MF	1
7	018264	INSULATOR, RUBBER SAFETY SWITCH	1
8	013704	LOCK WASHER, EXT STAR 8-32	2
9	018406	NUT BRASS, HEX 8-32	2
10	034072	KNOB, SAFETY SWITCH F/WALKER	1
11	034316	LEVER, SAFETY SWITCH F/PT	1
12	018326	COVER, SAFETY SWITCH	1
13	018623	SCREW, BRASS 8-32 x 3/8	1
14	018404	SCREW, SLT BRASS 8-32 x 1	1
15	013270	WIRE, RED 14 GA. ELECT	7.1 ft.

EDCO
A Division of Equipment Development Company, Inc.
CONTRxSystems
100 Thomas Johnson Drive, Frederick, MD 21702-4600 USA
Phone (301) 663-1600 • 1-800-638-3326
Fax (301) 663-1607 • 1-800-447-3326
Website: www.edcoinc.com
Email: sales@edcoinc.com

Printed in USA
TVW ©2011

LIMITED EQUIPMENT WARRANTY OF SALE – TERMS & CONDITIONS

Equipment Development Company, Inc. herein referred to as EDCO (Seller) warrants that each new unit manufactured by EDCO to be free from defects in material and workmanship in normal use and service for a period of (90) ninety days (except for the cutter drum assembly on all model concrete/asphalt planes, in which case the warranty period shall be 90 days) from date of shipment to the original retail or equipment rental center owner.

Accessories or equipment furnished and installed on the product by EDCO but manufactured by others, including, but not limited to engines, motors, electrical components, transmissions etc., shall carry the accessory manufacturers own warranty.

EDCO will, at its option, repair or replace, at the EDCO factory or at a point designated by EDCO, any part which shall appear to the satisfaction of EDCO inspection to have been defective in material or workmanship.

EDCO reserves the right to modify, alter and improve any part or parts without incurring any obligation to replace any part or parts previously sold without such modified, altered or improved part or parts.

This warranty is in lieu of and excludes all other warranties, expressed, implied, statutory, or otherwise created under applicable law including, but not limited to the warranty of merchantability and the warranty of fitness for a particular purpose in no event shall seller or the manufacturer of the product be liable for special, incidental, or consequential damages, including loss of profits, whether or not caused by or resulting from the negligence of seller and/or the manufacturer of the product unless specifically provided herein. In addition, this warranty shall not apply to any products or portions there of which have been subjected to abuse, misuse, improper installation, maintenance, or operation, electrical failure or abnormal conditions and to products which have been tampered with, altered, modified, repaired, reworked by anyone not approved by seller or used in any manner inconsistent with the provisions of the above or any instructions or specifications provided with or for the product

FORCE MAJEURE

Seller's obligation hereunder are subject to, and Seller shall not be held responsible for, any delay or failure to make delivery of all or any part of the Product due to labor difficulties, fires, casualties, accidents, acts of the elements, acts of God, transportation difficulties, delays by a common carrier, inability to obtain Product, materials or components or qualified labor sufficient to timely perform part of or all of the obligations contained in these terms and conditions, governmental regulations or actions, strikes, damage to or destruction in whole or part of manufacturing plant, riots, terrorist attacks or incidents, civil commotions, warlike conditions, flood , tidal waves, typhoon, hurricane, earthquake, lightning, explosion or any other causes, contingencies or circumstances within or without the United States not subject to the Seller's control which prevent or hinder the manufacture or delivery of the Products or make the fulfillment of these terms and conditions impracticable. In the event of the occurrence of any of the foregoing, at the option of Seller, Seller shall be excused from the performance under these Terms and Conditions, or the performance of the Seller shall be correspondingly extended.

This document sets forth the terms and conditions pursuant to which the purchaser ("Purchaser") will purchase and Equipment Development Co. Inc. ("Seller") will sell the products, accessories, attachments (collectively the Products ") ordered by the Purchaser. These terms and conditions shall govern and apply to the sale of Seller's Products to Purchaser, regardless of any terms and conditions appearing on any purchase order or other forms submitted by Purchaser to Seller, or the inconsistency of any terms therein and herein.

1. PRICE

All prices set forth on any purchase order or other document are F.O.B. Sellers facility or distribution point, as may be determined by Seller (F.O.B.Point). All prices are exclusive of any and all taxes, including, but not limited to, excise, sales, use, property or transportation taxes related to the sale or use of the Products, now or hereafter imposed, together with all penalties and expenses. Purchaser shall be responsible for collecting and/or paying any and all such taxes, whether or not they are stated in any invoice for the Products. Unless otherwise specified herein, all prices are exclusive of inland transportation, freight, insurance and other costs and expenses relating to the shipment of the Products from the F.O.B. point to Purchaser's facility. Any prepayment by Seller of freight insurance and other costs shall be for the account of Purchaser and shall be repaid to Seller.

2. PAYMENT TERMS

Payment terms are as follows. 2% 10 days (to approved and qualified accounts). Net 30 days. This is a cash discount for invoices paid within 10 days after the invoice date, regardless of date of receipt of shipment. This is not a trade discount and will not be granted to accounts that do not adhere to stated terms.

*All past due accounts are subject to a late payment fee of 1.5% per month or a maximum allowed by law if different, along with the expenses incidental to collection including reasonable attorney's fees and costs.

*Seller reserves the right to hold shipments against past due accounts.

*Seller reserves the right to alter payment terms.

3. FREIGHT TERMS

All shipments will be made F.O.B. shipping point as designated in these Terms and Conditions, and title shall pass at the F.O.B. point. Delivery to the initial common carrier shall constitute delivery to the Purchaser. Any claims for loss or damage during shipment are to be filed with carrier by the Purchaser. Seller will not assume responsibility for the performance of the carrier.

Back orders will be shipped in the most practical fashion with charges consistent with our freight policy established with the original order. UPS, FED EX, MAIL or shipments by other couriers are subject to the same terms and conditions as outlined in paragraph #3 "Freight Terms".

4. DELIVERY, DAMAGES, SHORTAGES

Seller shall use reasonable efforts to attempt to cause the Products to be delivered as provided for in these Terms & Conditions. Delivery to the initial common carrier shall constitute the delivery to the Purchaser. Sellers responsibility, in so far as transportation risks are concerned ceases upon the delivery of the Products in good condition to such carrier at the F.O.B. point and all the Products shall be shipped at the Purchaser's risk. Seller shall not be responsible or liable for any loss of income and/or profits, or incidental, special, consequential damages resulting from Seller's delayed performance in shipment and delivery.

5. RETURN OF DEFECTIVE PRODUCTS

Defective or failed material shall be held at the Purchaser's premises until authorization has been granted by Seller to return or dispose of Products. Products that are to be returned for final inspection must be returned Freight Prepaid in the most economical way. Credit will be issued for material found to be defective upon Seller's inspection based on prices at time of purchase.

6. PRODUCTS ORDERED IN ERROR

Products may be returned, provided that claim is made and Seller is notified within 7 days of receipt of Products, and the Products are in original buyer's possession not more than 30 days prior to return, subject to Seller's approval. If Products are accepted for return, they must be Freight Prepaid and buyer will be charged a minimum of 15% restocking charge, plus a charge back for outbound freight charges if the original order was shipped prepaid. Returns are not accepted for any Products that are specifically manufactured to meet the buyer's requirement of either specifications or quantity.

AGREEMENTS

These Terms and Conditions constitute the entire agreement between Seller and Purchaser as it relates to terms and conditions of sale, and supersedes any and all prior oral or written agreements, correspondence, quotations or understandings heretofore in force between the parties relating to the subject matter hereof. There are no agreements between Seller and Purchaser with respect to the Product herein except those specifically set forth in and made part of these terms and conditions. Any additional terms, conditions and/or prices are rejected by Seller.

These terms and conditions may be modified, cancelled or rescinded only by a written agreement of both parties executed by their duly authorized agents.

USE ONLY GENUINE EDCO PARTS & ACCESSORIES

For your own safety, the safety of others and the life of your machine.

Equipment Development Company, Inc.

100 Thomas Johnson Drive, Frederick, MD 21702-4600 USA
Phone (301) 663-1600 • 1-800-638-3326
Fax (301) 663-1607 • 1-800-447-3326
Website: www.edcoinc.com
Email: sales@edcoinc.com

EDCO
A Division of Equipment Development Com

CONTRx Systems