Collomix®

Revision: 2013-08-03

Spare parts for Handmixer COLLOMIX Xo55 DUO, 110 V

Product group 901

No.	Ref.-No.	Designation
1	21.042	Screw 4x16 Tx20
2	21.190	Motor cover Xo55
3	21.045	Screw M6x16 Tx30
4	21.003	Handle left top
5	21.005	Handle right top
6	21.068	Handle bracket
7	21.058	Screw 4x25 Tx20
8	21.047	Cord clamp
9	21.035	Capacitor
10	21.236	Switch assy 110V
11	21.034	Clamp
12	21.033	Spring
13	21.032	Lever
14	21.183	Cable switch 110V
15	21.004	Handle left base
16	21.006	Handle right base
17	21.071	Cord Guard 110V
18	27.054	Mains Cable 110V with US plug
19	61.117	Cable strap
20	20.200	Handle 110V US complete
21	21.221	Carbon brushes 110V (2 Piece)
22	21.175	Brush holder 110V
23	21.046	Hexagon nut M6
24	21.077	Motor housing
25	21.153	Sticker Xo55
25	21.112	Sticker X06
26	21.223	Field coil 110V
27	21.044	Screw 3,5x70/25
28	21.127	Baffle Plate
29	21.128	Rectifier
30	21.184	Air Outlet
31	21.097	Rubber sleeve
32	21.100	Ball Bearing 608 2RS C3
33	21.136	DIN 988 Shim ring 12/18x1
34	21.101	Ball Bearing 6001 2RS C3

No.	Ref.-No.	Designation
35	21.220	Rotor 110V
36	21.192	Plate assy
37	21.180	Acoustic foam
38	21.179	DIN 6325 Pin Ø4x14m6
39	21.043	Screw 4x55/20 Tx20
40	21.151	O-Ring
41	21.193	Middle shaft 1
44	21.103	Screw 4x8
45	21.194	Middle shaft 2
46	21.196	Gear shaft
47	21.088	Circlip 15x1,5
48	21.157	Gear z44
49	21.090	DIN 988 Shim ring 15/21x1
50	21.098	Ball Bearing 6002 2RS C3
51	50.406	DIN 471 Lock ring 20x1,2
52	21.099	Ball Bearing 6204-2RSH
53	21.092	Felt ring
54	21.093	Sleeve
55	21.156	Mixing shaft I
56	21.154	DIN 6885 Feather key formA 5x5x12
57	50.414	DIN 472 Lock ring 47x1,75
58	21.155	Mixing shaft II
59	21.191	Gear box
60	21.178	Screw 4x16
61	49.540	Hexafix coupling DUO I (left side)
62	49.545	Hexafix coupling DUO II (right side)
64	21.168	Gear complete
63	49534-000	Protection sleeve HEXAFIX kit turquoise/red
65	21.109	Plug
66	21.072	Disk
67	21.237	Ball Bearing 626 ZZ

Collomix® Rühr- und Mischgeräte GmbH
Postfach 11 46 D-85078 Gaimersheim
Daimlerstr. 9 D-85080 Gaimersheim
GLN 40 11024 000002 – EORI DE2984431

Tel: 08458-3298-0
Fax: 08458-3298-30
e-mail: info@collomix.de
USt. ID-Nr. DE128579719

Geschäftsführer: Alexander Essing, Jörg Kiefer
Registergericht HRB 127 Ingolstadt
St.Nr.FA Ingolstadt 123/124/60018

Sparkasse Ingolstadt BLZ 721 500 00 Konto 100 610
Volksbank Ingolstadt BLZ 721 608 18 Konto 8 408 068
Postgirokonto München BLZ 700 100 80 Konto 196 96-800

COLLOMIX Xo55 DUO, 110 V

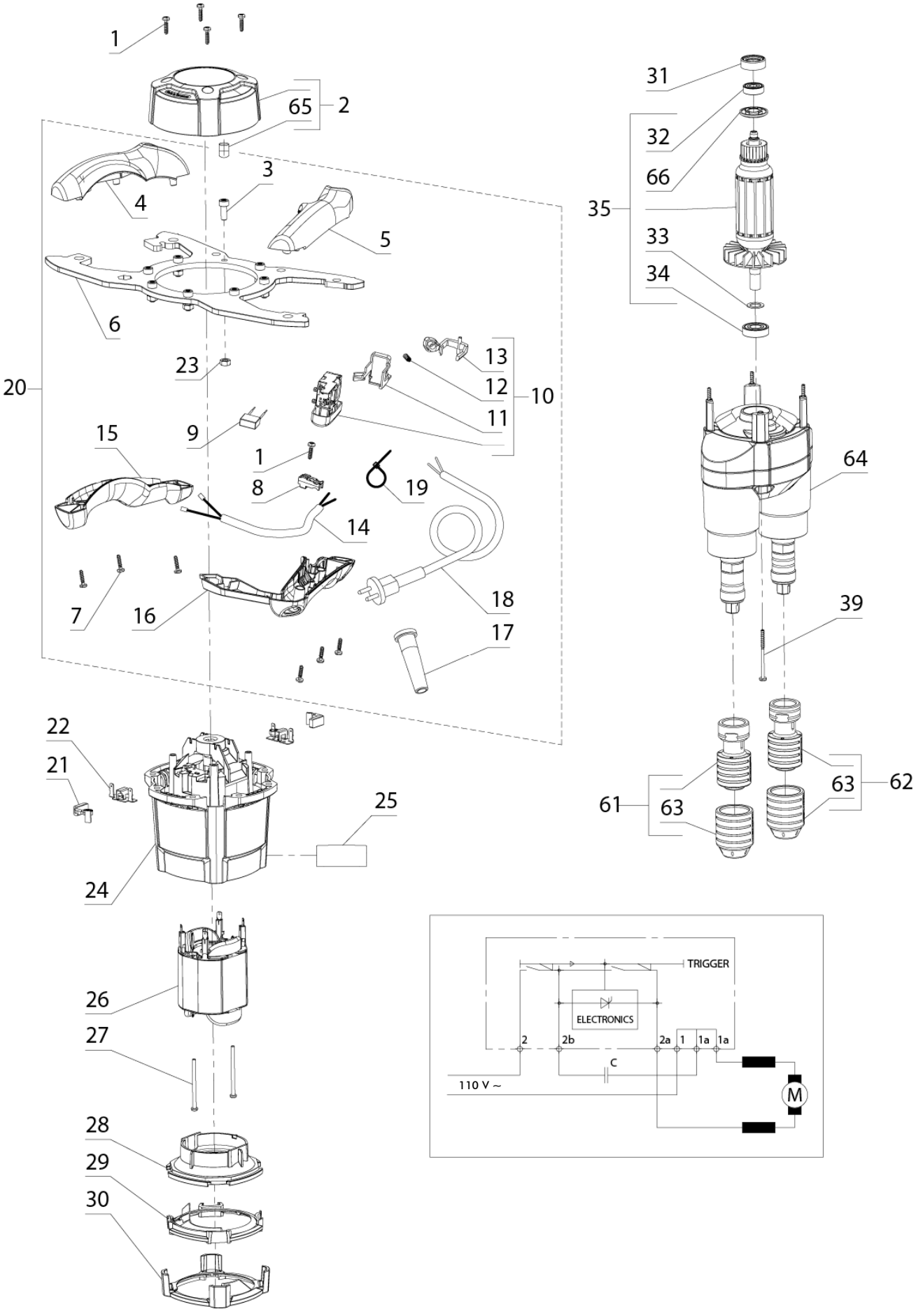
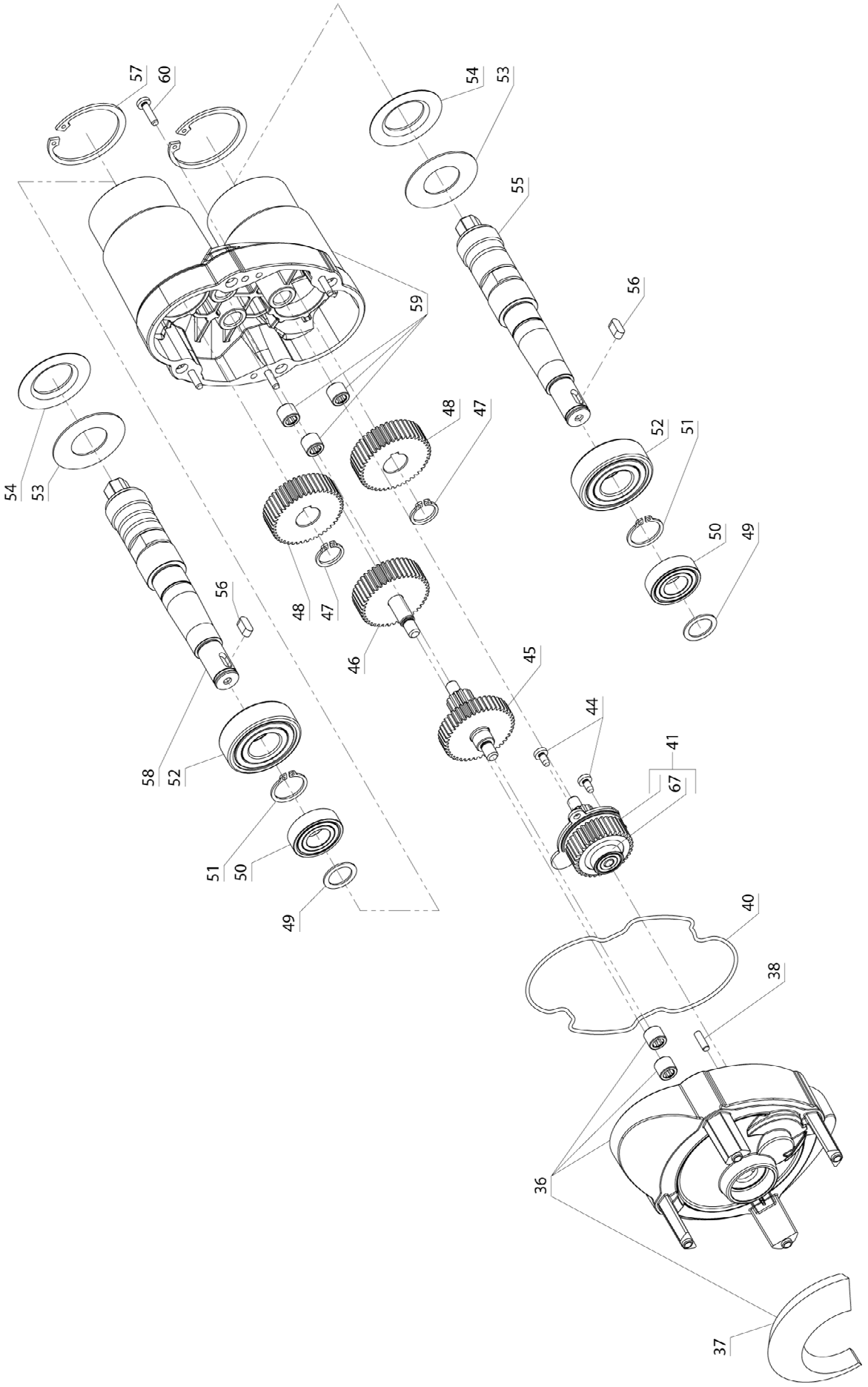
COLLOMIX Xo55 DUO, 110 V