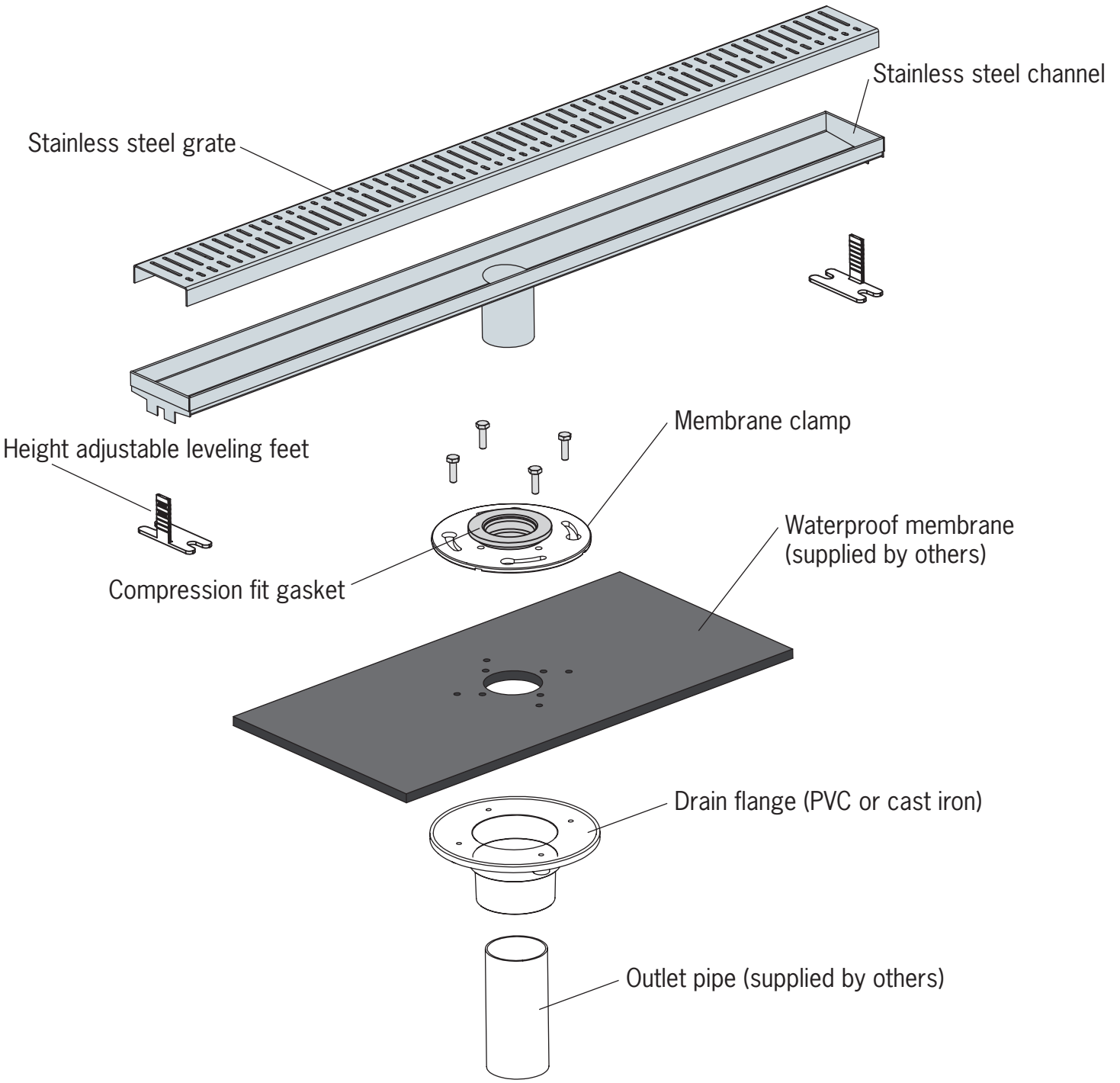
Stainless steel channel
Stainless steel grate
Height adjustable leveling feet
Membrane clamp
Compression fit gasket
Waterproof membrane
(supplied by others)
Drain flange (PVC or cast iron)
Outlet pipe (supplied by others)

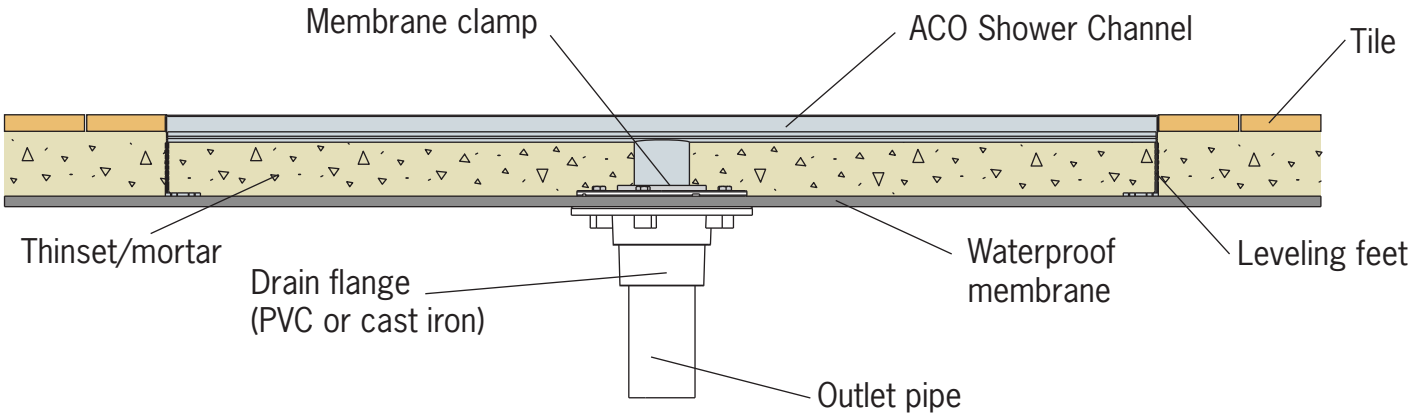
Membrane clamp
ACO Shower Channel
Tile
Thinset/mortar
Drain flange
(PVC or cast iron)
Waterproof
membrane
Leveling feet
Outlet pipe

Shower Channel - Plain edge

For CPE membranes

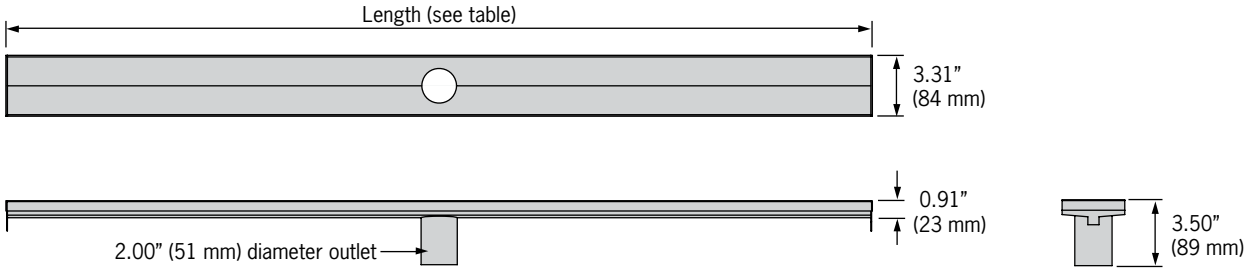

Product Table

Length *(mm)* inches	*700* 27.55	*800* 31.50	*900* 35.43	*1000* 39.37	*1200* 47.24	*1400* 55.12	CPE membrane coupling
Part No. Electro-polished	**93861**	**93864**	**93865**	**93869**	**93872**	**93816**	**93871**
Part No. Oil-rubbed bronze	**93180**	**93187**	**93184**	**93189**	**93182**	**93177**	**93871**
Weight lbs	2.5	2.6	3.0	3.2	3.7	4.2	1.1

Specification Clause

The QuARTz by ACO shower channel and grate system shall be stainless steel grade 304 manufactured by ACO Polymer Products, Inc. USA. The surface finish shall be Electropolished* OR Oil Rubbed Bronze*. Grate shall be Flag*/Hawaii*/Mix*/Pixel*/Quadrato*/Wave*/Tile*.

Shower channels shall be 3-5/16" (84mm) wide, with length as specified on Architects plans / Architects specification. Outlet spigot (O.D.) diameter shall be 50mm [1.968"]

The CPE membrane coupling [to provide connection to S/S spigot of shower channel and plumbing pipe system] shall be supplied by ACO Polymer Products Inc. This PVC drain body will provide clamping ability for CPE membrane. (supplied by others)

ACO recommends checking local plumbing codes prior to installation.

The system shall be installed in accordance with the manufacturer's instructions and recommendations.

*Delete as necessary

ACO Polymer Products, Inc.

East Sales Office
P.O. Box 245
Chardon, OH 44024
Tel: (440) 285-7000
Toll free: (800) 543-4764
Fax: (440) 285-7005

West Sales Office
P.O. Box 12067
Casa Grande, AZ 85130
Tel: (520) 421-9988
Toll Free: (888) 490-9552
Fax: (520) 421-9899

Follow us on

Electronic Contact:
info@QuARTzbyACO.com
www.QuARTzbyACO.com

SPEC ACO INFO

© August 2010 ACO Polymer Products, Inc. This information is believed to be accurate but it is not guaranteed to be so. We cannot assume liability for results that buyer obtains with our product since conditions of use are beyond the control of the company. It is the customer's responsibility to evaluate suitability and safety of product for his own use. ACO Polymer Products Inc. reserves the right to change the product and specifications without notice.

Shower Channel - Flange edge

For liquid membranes

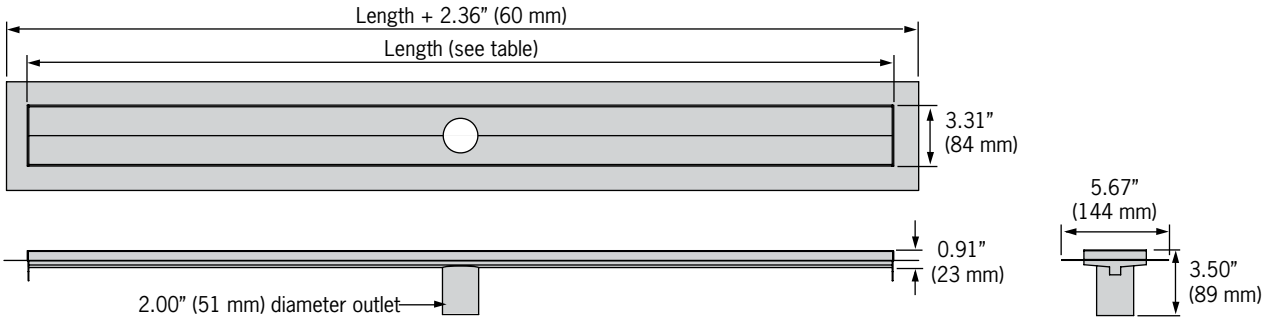

Product Table

Length *(mm)* inches	*700* 27.55	*800* 31.50	*900* 35.43	*1000* 39.37	*1200* 47.24	*1400* 55.12	2" Stainless steel coupling
Part No. Electro-polished	**93866**	**93873**	**93862**	**93870**	**93875**	**93817**	**93874**
Part No. Oil-rubbed bronze	**93188**	**93181**	**93183**	**93186**	**93185**	**93178**	**93874**
Weight lbs	3.4	3.5	4.1	4.4	4.6	5.9	1.4

Specification Clause

The QuARTz by ACO shower channel and grate system shall be stainless steel grade 304 manufactured by ACO Polymer Products, Inc. USA. The surface finish shall be Electropolished* OR Oil Rubbed Bronze*. Grate shall be Flag*/Hawaii*/Mix*/Pixel*/Quadrato*/Wave*/Tile*.

Shower channels shall be 3-5/16" (84mm) wide, with length as specified on Architects plans / Architects specification. Outlet spigot (O.D.) diameter shall be 50mm [1.968"]

The CPE membrane coupling [to provide connection to S/S spigot of shower channel and plumbing pipe system] shall be supplied by ACO Polymer Products Inc. This PVC drain body will provide clamping ability for CPE membrane. (supplied by others)

ACO recommends checking local plumbing codes prior to installation.

The system shall be installed in accordance with the manufacturer's instructions and recommendations.

*Delete as necessary

ACO Polymer Products, Inc.

East Sales Office
P.O. Box 245
Chardon, OH 44024
Tel: (440) 285-7000
Toll free: (800) 543-4764
Fax: (440) 285-7005

West Sales Office
P.O. Box 12067
Casa Grande, AZ 85130
Tel: (520) 421-9988
Toll Free: (888) 490-9552
Fax: (520) 421-9899

Follow us on

Electronic Contact:
info@QuARTzbyACO.com
www.QuARTzbyACO.com

SPEC ACO INFO

© August 2010 ACO Polymer Products, Inc. This information is believed to be accurate but it is not guaranteed to be so. We cannot assume liability for results that buyer obtains with our product since conditions of use are beyond the control of the company. It is the customer's responsibility to evaluate suitability and safety of product for his own use. ACO Polymer Products Inc. reserves the right to change the product and specifications without notice.

Shower Channel - Stainless Steel Clad Coupling

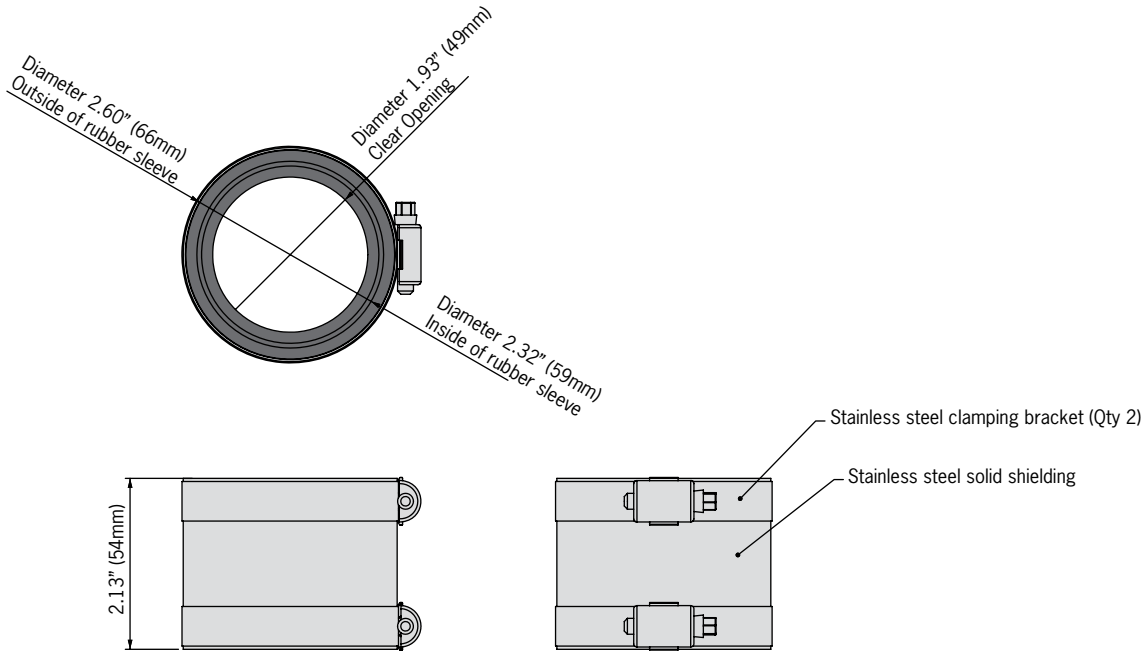

Product Table

Description	Part No.	Weight
Stainless steel clad coupling	**93874**	0.4

ACO Polymer Products, Inc.

East Sales Office
P.O. Box 245
Chardon, OH 44024
Tel: (440) 285-7000
Toll free: (800) 543-4764
Fax: (440) 285-7005

West Sales Office
P.O. Box 12067
Casa Grande, AZ 85130
Tel: (520) 421-9988
Toll Free: (888) 490-9552
Fax: (520) 421-9899

Follow us on

Electronic Contact:
info@QuARTzbyACO.com
www.QuARTzbyACO.com

SPEC INFO ACO

© July 2011 ACO Polymer Products, Inc. This information is believed to be accurate but it is not guaranteed to be so. We cannot assume liability for results that buyer obtains with our product since conditions of use are beyond the control of the company. It is the customer's responsibility to evaluate suitability and safety of product for his own use. ACO Polymer Products Inc. reserves the right to change the product and specifications without notice.

Shower Channel - CPE Membrane Coupling

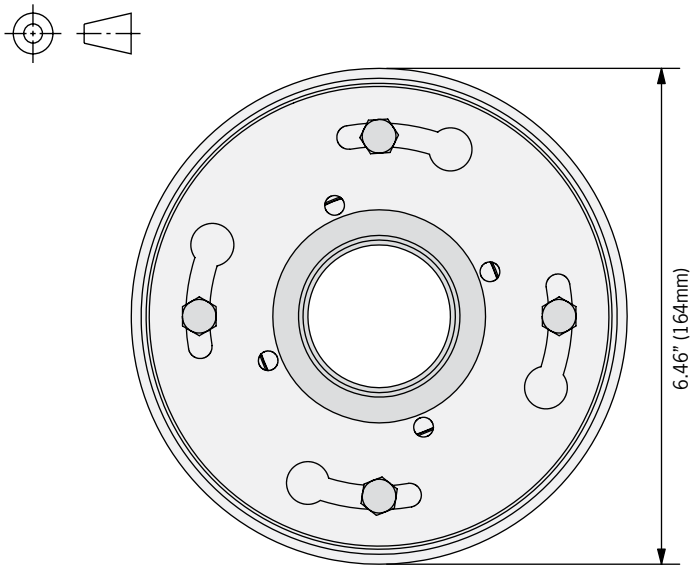

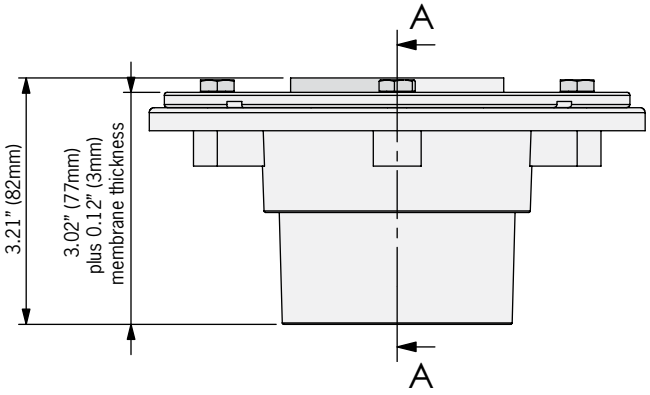

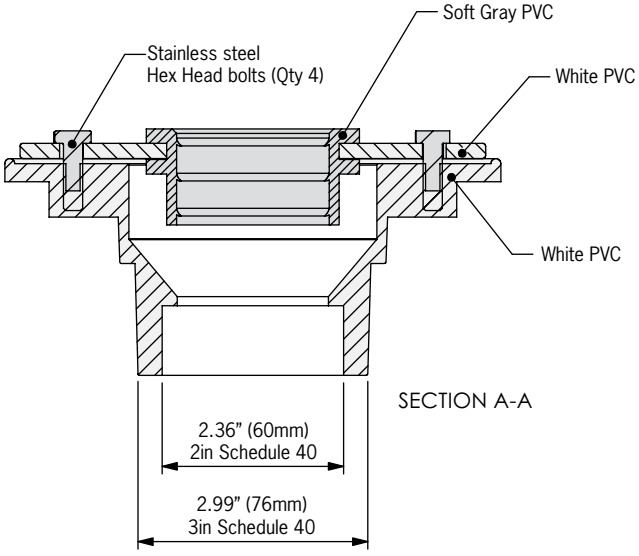

Product Table

Description	Part No.	Weight
CPE membrane coupling	**93871**	1.1

ACO Polymer Products, Inc.

East Sales Office
P.O. Box 245
Chardon, OH 44024
Tel: (440) 285-7000
Toll free: (800) 543-4764
Fax: (440) 285-7005

West Sales Office
P.O. Box 12067
Casa Grande, AZ 85130
Tel: (520) 421-9988
Toll Free: (888) 490-9552
Fax: (520) 421-9899

Follow us on

Electronic Contact:
info@QuARTzbyACO.com
www.QuARTzbyACO.com

SPEC INFO ACO

© July 2011 ACO Polymer Products, Inc. This information is believed to be accurate but it is not guaranteed to be so. We cannot assume liability for results that buyer obtains with our product since conditions of use are beyond the control of the company. It is the customer's responsibility to evaluate suitability and safety of product for his own use. ACO Polymer Products Inc. reserves the right to change the product and specifications without notice.

Shower Channel - Strainer

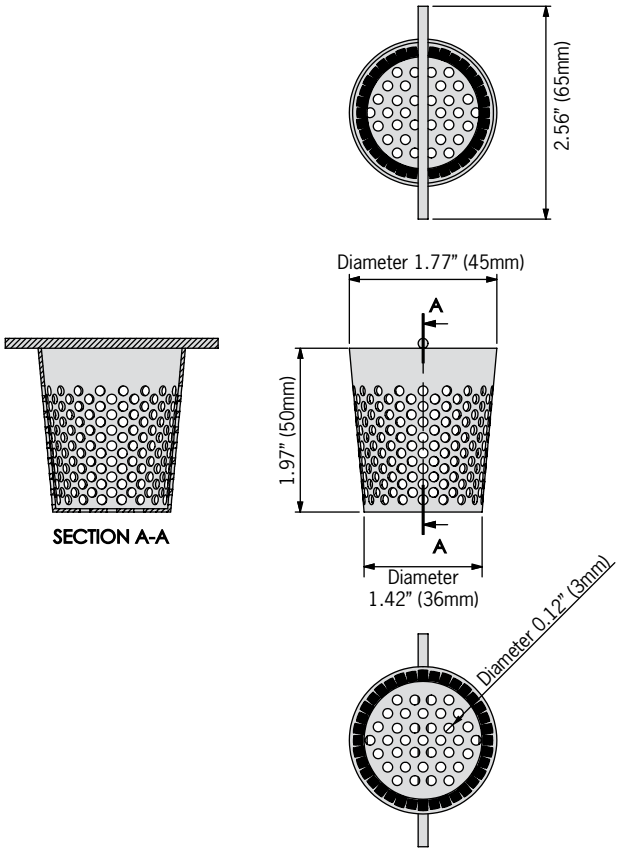

Product Table

Description	Part No.	Weight
Debris strainer - electro polished	**37381**	0.8
Debris strainer - oil-rubbed bronze	**37382**	0.8

ACO Polymer Products, Inc.

East Sales Office
P.O. Box 245
Chardon, OH 44024
Tel: (440) 285-7000
Toll free: (800) 543-4764
Fax: (440) 285-7005

West Sales Office
P.O. Box 12067
Casa Grande, AZ 85130
Tel: (520) 421-9988
Toll Free: (888) 490-9552
Fax: (520) 421-9899

Follow us on

Electronic Contact:
info@QuARTzbyACO.com
www.QuARTzbyACO.com

SPEC INFO ACO

© July 2011 ACO Polymer Products, Inc. This information is believed to be accurate but it is not guaranteed to be so. We cannot assume liability for results that buyer obtains with our product since conditions of use are beyond the control of the company. It is the customer's responsibility to evaluate suitability and safety of product for his own use. ACO Polymer Products Inc. reserves the right to change the product and specifications without notice.

Shower Channel - Hawaii Grate

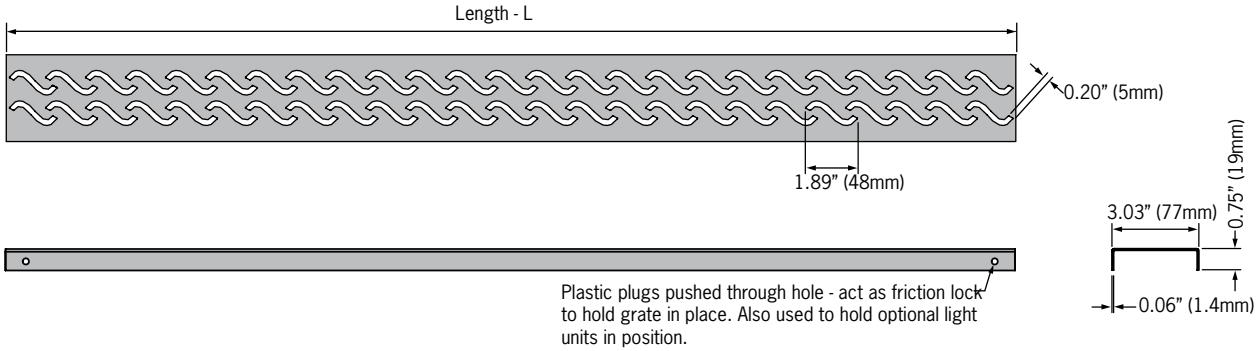

Product Table

Length *(mm)* inches	*700* 27.55	*800* 31.50	*900* 35.43	*1000* 39.37	*1200* 47.24	*1400* 55.12	Replacement grate lifting key
Part No. Electro-polished	**37398**	**37399**	**37400**	**37401**	**37402**	**37414**	**37339**
Part No. Oil-rubbed bronze	**37330**	**37314**	**37305**	**37325**	**37318**	**37293**	**37339**
Weight lbs	1.6	1.8	2.1	2.2	2.8	3.4	0.1

Specification Clause

The QuARTz by ACO shower channel and Hawaii grate system shall be stainless steel grade 304 manufactured by ACO Polymer Products, Inc. USA. The surface finish shall be Electropolished* OR Oil Rubbed Bronze*.

Grate shall be 3.03" (77mm) wide, with length as specified on Architects plans / Architects specification.

Shower channel shall be Plain Edge* OR Flanged Edge*. (See separate Spec Info Sheet for details)

ACO recommends checking local plumbing codes prior to installation.

The system shall be installed in accordance with the manufacturer's instructions and recommendations.

*Delete one

ACO Polymer Products, Inc.

East Sales Office
P.O. Box 245
Chardon, OH 44024
Tel: (440) 285-7000
Toll free: (800) 543-4764
Fax: (440) 285-7005

West Sales Office
P.O. Box 12067
Casa Grande, AZ 85130
Tel: (520) 421-9988
Toll Free: (888) 490-9552
Fax: (520) 421-9899

Follow us on

Electronic Contact:
info@QuARTzbyACO.com
www.QuARTzbyACO.com

SPEC INFO ACO

© August 2010 ACO Polymer Products, Inc. This information is believed to be accurate but it is not guaranteed to be so. We cannot assume liability for results that buyer obtains with our product since conditions of use are beyond the control of the company. It is the customer's responsibility to evaluate suitability and safety of product for his own use. ACO Polymer Products Inc. reserves the right to change the product and specifications without notice.
Re-order QL011

Shower Channel - Tile Grate

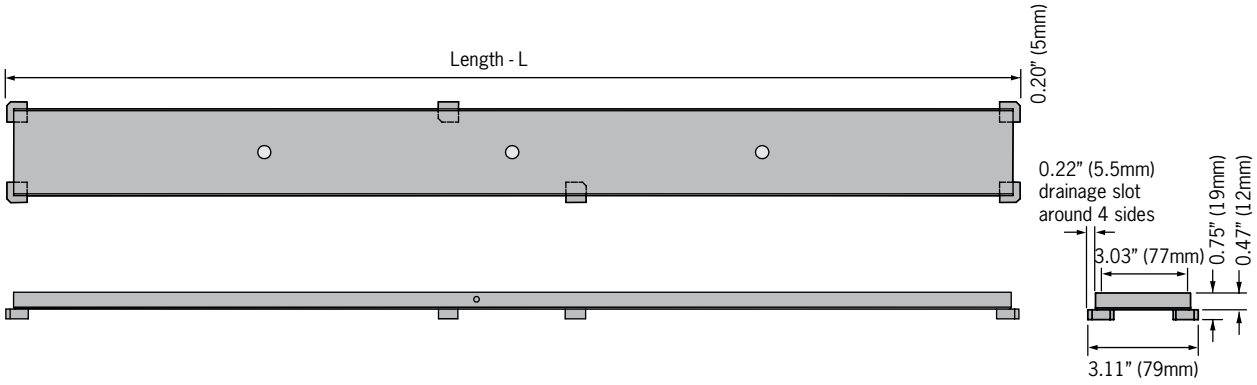

Product Table

Length *(mm)* inches	*700* 27.55	*800* 31.50	*900* 35.43	*1000* 39.37	*1200* 47.24	*1400* 55.12	Replacement grate lifting key
Part No. Electro-polished	**37335**	**37338**	**37336**	**37334**	**37332**	**37419**	**37339**
Part No. Oil-rubbed bronze	**37327**	**37300**	**37331**	**37323**	**37310**	**37298**	**37339**
Weight lbs	1.7	2.0	2.2	2.5	2.9	3.3	0.1

Specification Clause

The QuARTz by ACO shower channel and Tile grate system shall be stainless steel grade 304 manufactured by ACO Polymer Products, Inc. USA. The surface finish shall be Electropolished* OR Oil Rubbed Bronze*.

Grate shall be 3.03" (77mm) wide, with length as specified on Architects plans / Architects specification.

Shower channel shall be Plain Edge* OR Flanged Edge*. (See separate Spec Info Sheet for details)

ACO recommends checking local plumbing codes prior to installation.

The system shall be installed in accordance with the manufacturer's instructions and recommendations.

*Delete one

ACO Polymer Products, Inc.

East Sales Office
P.O. Box 245
Chardon, OH 44024
Tel: (440) 285-7000
Toll free: (800) 543-4764
Fax: (440) 285-7005

West Sales Office
P.O. Box 12067
Casa Grande, AZ 85130
Tel: (520) 421-9988
Toll Free: (888) 490-9552
Fax: (520) 421-9899

Follow us on

Electronic Contact:
info@QuARTzbyACO.com
www.QuARTzbyACO.com

SPEC INFO ACO

© August 2010 ACO Polymer Products, Inc. This information is believed to be accurate but it is not guaranteed to be so. We cannot assume liability for results that buyer obtains with our product since conditions of use are beyond the control of the company. It is the customer's responsibility to evaluate suitability and safety of product for his own use. ACO Polymer Products Inc. reserves the right to change the product and specifications without notice.

Shower Channel - Pixel Grate

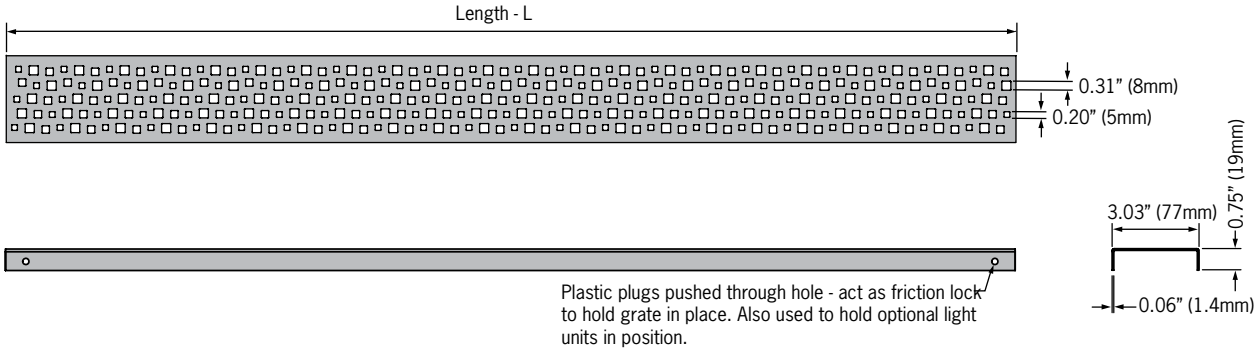

Product Table

Length *(mm)* inches	*700* 27.55	*800* 31.50	*900* 35.43	*1000* 39.37	*1200* 47.24	*1400* 55.12	Replacement grate lifting key
Part No. Electro-polished	**37408**	**37409**	**37410**	**37411**	**37412**	**37416**	**37339**
Part No. Oil-rubbed bronze	**37304**	**37333**	**37328**	**37337**	**37316**	**37295**	**37339**
Weight lbs	1.7	1.9	2.1	2.4	2.9	3.4	0.1

Specification Clause

The QuARTz by ACO shower channel and Pixel grate system shall be stainless steel grade 304 manufactured by ACO Polymer Products, Inc. USA. The surface finish shall be Electropolished* OR Oil Rubbed Bronze*.

Grate shall be 3.03" (77mm) wide, with length as specified on Architects plans / Architects specification.

Shower channel shall be Plain Edge* OR Flanged Edge*. (See separate Spec Info Sheet for details)

ACO recommends checking local plumbing codes prior to installation.

The system shall be installed in accordance with the manufacturer's instructions and recommendations.

*Delete one

ACO Polymer Products, Inc.

East Sales Office
P.O. Box 245
Chardon, OH 44024
Tel: (440) 285-7000
Toll free: (800) 543-4764
Fax: (440) 285-7005

West Sales Office
P.O. Box 12067
Casa Grande, AZ 85130
Tel: (520) 421-9988
Toll Free: (888) 490-9552
Fax: (520) 421-9899

Follow us on

Electronic Contact:
info@QuARTzbyACO.com
www.QuARTzbyACO.com

SPEC INFO ACO

© August 2010 ACO Polymer Products, Inc. This information is believed to be accurate but it is not guaranteed to be so. We cannot assume liability for results that buyer obtains with our product since conditions of use are beyond the control of the company. It is the customer's responsibility to evaluate suitability and safety of product for his own use. ACO Polymer Products Inc. reserves the right to change the product and specifications without notice.
Re-order QL013

Shower Channel - Mix Grate

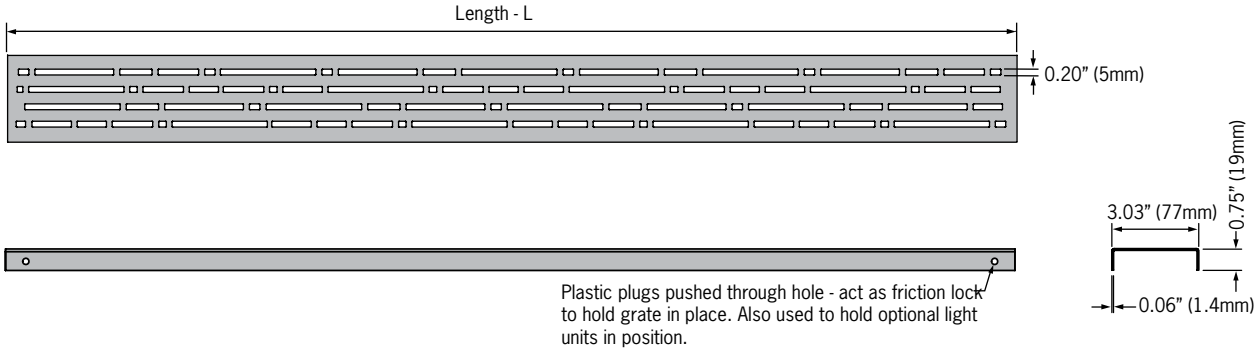

Product Table

Length *(mm)* inches	*700* 27.55	*800* 31.50	*900* 35.43	*1000* 39.37	*1200* 47.24	*1400* 55.12	Replacement grate lifting key
Part No. Electro-polished	**37403**	**37404**	**37405**	**37406**	**37407**	**37415**	**37339**
Part No. Oil-rubbed bronze	**37301**	**37326**	**37340**	**37319**	**37329**	**37294**	**37339**
Weight lbs	1.7	1.9	2.1	2.4	2.9	3.4	0.1

Specification Clause

The QuARTz by ACO shower channel and Mix grate system shall be stainless steel grade 304 manufactured by ACO Polymer Products, Inc. USA. The surface finish shall be Electropolished* OR Oil Rubbed Bronze*.

Grate shall be 3.03" (77mm) wide, with length as specified on Architects plans / Architects specification.

Shower channel shall be Plain Edge* OR Flanged Edge*. (See separate Spec Info Sheet for details)

ACO recommends checking local plumbing codes prior to installation.

The system shall be installed in accordance with the manufacturer's instructions and recommendations.

*Delete one

ACO Polymer Products, Inc.

East Sales Office
P.O. Box 245
Chardon, OH 44024
Tel: (440) 285-7000
Toll free: (800) 543-4764
Fax: (440) 285-7005

West Sales Office
P.O. Box 12067
Casa Grande, AZ 85130
Tel: (520) 421-9988
Toll Free: (888) 490-9552
Fax: (520) 421-9899

Follow us on

Electronic Contact:
info@QuARTzbyACO.com
www.QuARTzbyACO.com

SPEC INFO ACO

© August 2010 ACO Polymer Products, Inc. This information is believed to be accurate but it is not guaranteed to be so. We cannot assume liability for results that buyer obtains with our product since conditions of use are beyond the control of the company. It is the customer's responsibility to evaluate suitability and safety of product for his own use. ACO Polymer Products Inc. reserves the right to change the product and specifications without notice.
Re-order QL012

Shower Channel - Flag Grate

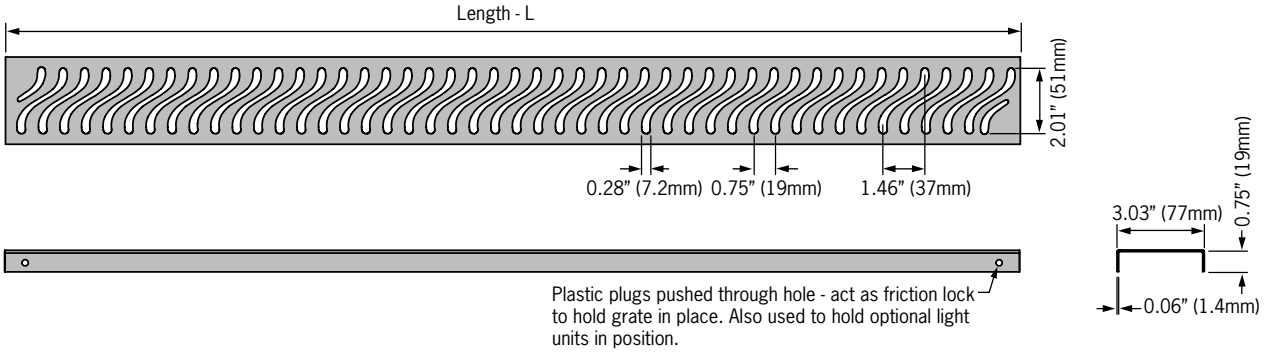

Product Table

Length *(mm)* inches	*700* 27.55	*800* 31.50	*900* 35.43	*1000* 39.37	*1200* 47.24	*1400* 55.12	Replacement grate lifting key
Part No. Electro-polished	**37369**	**37370**	**37371**	**37372**	**37373**	**37417**	**37339**
Part No. Oil-rubbed bronze	**37324**	**37306**	**37315**	**37322**	**37311**	**37296**	**37339**
Weight lbs	1.6	1.8	2.1	2.2	2.8	3.4	0.1

Specification Clause

The QuARTz by ACO shower channel and Flag grate system shall be stainless steel grade 304 manufactured by ACO Polymer Products, Inc. USA. The surface finish shall be Electropolished* OR Oil Rubbed Bronze*.

Grate shall be 3.03" (77mm) wide, with length as specified on Architects plans / Architects specification.

Shower channel shall be Plain Edge* OR Flanged Edge*. (See separate Spec Info Sheet for details)

ACO recommends checking local plumbing codes prior to installation.

The system shall be installed in accordance with the manufacturer's instructions and recommendations.

*Delete one

ACO Polymer Products, Inc.

East Sales Office
P.O. Box 245
Chardon, OH 44024
Tel: (440) 285-7000
Toll free: (800) 543-4764
Fax: (440) 285-7005

West Sales Office
P.O. Box 12067
Casa Grande, AZ 85130
Tel: (520) 421-9988
Toll Free: (888) 490-9552
Fax: (520) 421-9899

Follow us on

Electronic Contact:
info@QuARTzbyACO.com
www.QuARTzbyACO.com

SPEC INFO ACO

© August 2010 ACO Polymer Products, Inc. This information is believed to be accurate but it is not guaranteed to be so. We cannot assume liability for results that buyer obtains with our product since conditions of use are beyond the control of the company. It is the customer's responsibility to evaluate suitability and safety of product for his own use. ACO Polymer Products Inc. reserves the right to change the product and specifications without notice.
Re-order QL010

Shower Channel - Quadrato Grate

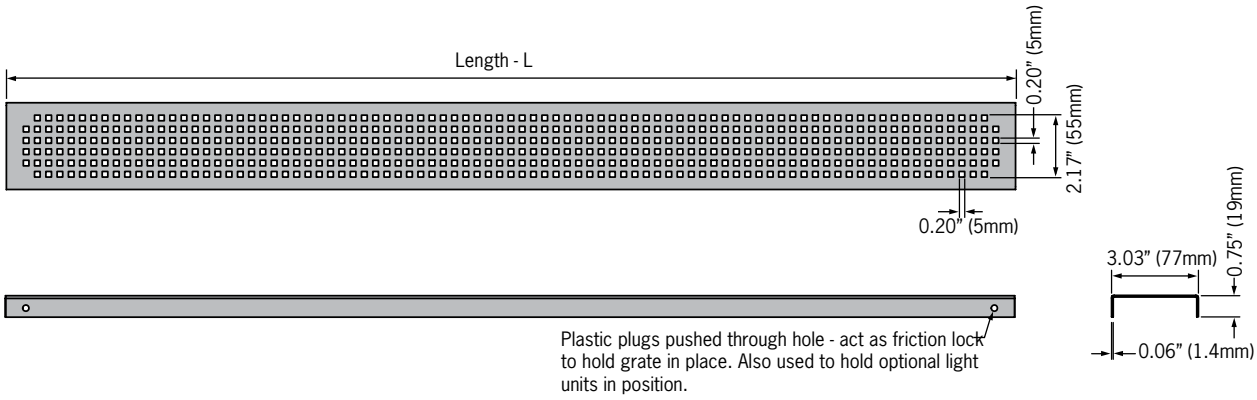

Product Table

Length *(mm)* inches	*700* 27.55	*800* 31.50	*900* 35.43	*1000* 39.37	*1200* 47.24	*1400* 55.12	Replacement grate lifting key
Part No. Electro-polished	**37359**	**37360**	**37361**	**37362**	**37363**	**37418**	**37339**
Part No. Oil-rubbed bronze	**37317**	**37309**	**37303**	**37320**	**37307**	**37297**	**37339**
Weight lbs	1.7	1.9	2.1	2.4	2.9	3.4	0.1

Specification Clause

The QuARTz by ACO shower channel and Quadrato grate system shall be stainless steel grade 304 manufactured by ACO Polymer Products, Inc. USA. The surface finish shall be Electropolished* OR Oil Rubbed Bronze*.

Grate shall be 3.03" (77mm) wide, with length as specified on Architects plans / Architects specification.

Shower channel shall be Plain Edge* OR Flanged Edge*. (See separate Spec Info Sheet for details)

ACO recommends checking local plumbing codes prior to installation.

The system shall be installed in accordance with the manufacturer's instructions and recommendations.

*Delete one

ACO Polymer Products, Inc.

East Sales Office
P.O. Box 245
Chardon, OH 44024
Tel: (440) 285-7000
Toll free: (800) 543-4764
Fax: (440) 285-7005

West Sales Office
P.O. Box 12067
Casa Grande, AZ 85130
Tel: (520) 421-9988
Toll Free: (888) 490-9552
Fax: (520) 421-9899

Follow us on

Electronic Contact:
info@QuARTzbyACO.com
www.QuARTzbyACO.com

SPEC ACO INFO

© August 2010 ACO Polymer Products, Inc. This information is believed to be accurate but it is not guaranteed to be so. We cannot assume liability for results that buyer obtains with our product since conditions of use are beyond the control of the company. It is the customer's responsibility to evaluate suitability and safety of product for his own use. ACO Polymer Products Inc. reserves the right to change the product and specifications without notice.

Shower Channel - Wave Grate

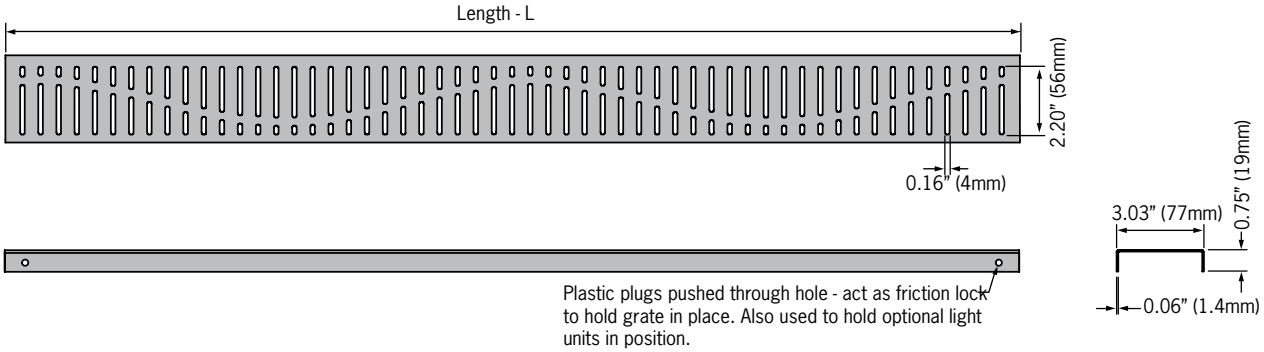

Product Table

Length *(mm)* inches	*700* 27.55	*800* 31.50	*900* 35.43	*1000* 39.37	*1200* 47.24	*1400* 55.12	Replacement grate lifting key
Part No. Electro-polished	**37342**	**37343**	**37344**	**37345**	**37346**	**37413**	**37339**
Part No. Oil-rubbed bronze	**37312**	**37321**	**37308**	**37313**	**37302**	**37292**	**37339**
Weight lbs	1.7	1.9	2.2	2.5	2.9	3.3	0.1

Specification Clause

The QuARTz by ACO shower channel and Wave grate system shall be stainless steel grade 304 manufactured by ACO Polymer Products, Inc. USA. The surface finish shall be Electropolished* OR Oil Rubbed Bronze*.

Grate shall be 3.03" (77mm) wide, with length as specified on Architects plans / Architects specification.

Shower channel shall be Plain Edge* OR Flanged Edge*. (See separate Spec Info Sheet for details)

ACO recommends checking local plumbing codes prior to installation.

The system shall be installed in accordance with the manufacturer's instructions and recommendations.

*Delete one

ACO Polymer Products, Inc.

East Sales Office
P.O. Box 245
Chardon, OH 44024
Tel: (440) 285-7000
Toll free: (800) 543-4764
Fax: (440) 285-7005

West Sales Office
P.O. Box 12067
Casa Grande, AZ 85130
Tel: (520) 421-9988
Toll Free: (888) 490-9552
Fax: (520) 421-9899

Follow us on

Electronic Contact:
info@QuARTzbyACO.com
www.QuARTzbyACO.com

SPEC INFO ACO

© August 2010 ACO Polymer Products, Inc. This information is believed to be accurate but it is not guaranteed to be so. We cannot assume liability for results that buyer obtains with our product since conditions of use are beyond the control of the company. It is the customer's responsibility to evaluate suitability and safety of product for his own use. ACO Polymer Products Inc. reserves the right to change the product and specifications without notice.
Re-order QL016